Link-Belt®

LS-98PL

Crawler Pipeliner/Excavator

ENERAL INFORMATION ONL

Tractor-Type Crawler Mounting All-Welded And Stress Relieved

gned For Extensive Machine Travel

ENERAL INFORMATION ONL

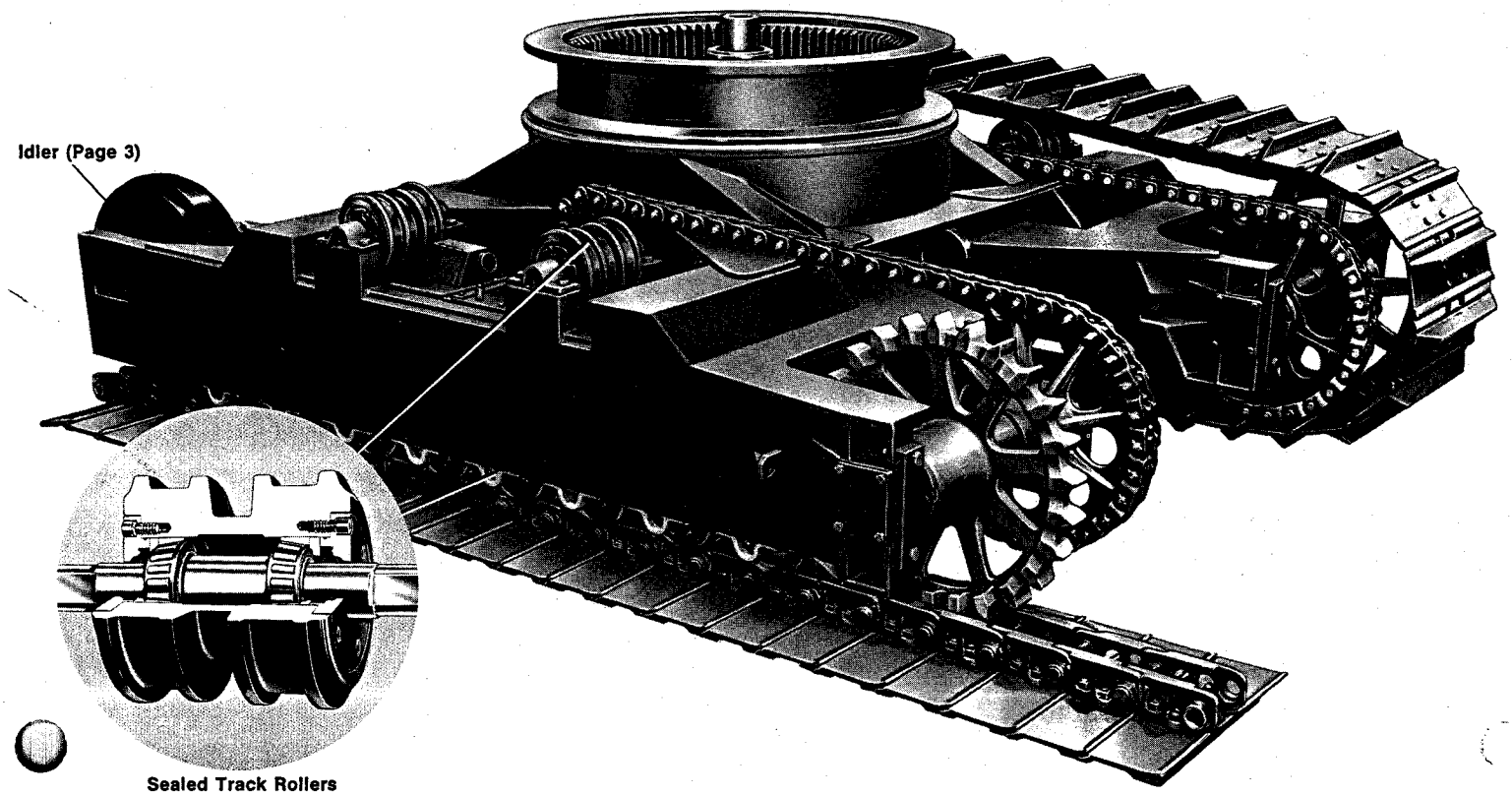

Sealed Track Rollers

The Link-Belt® LS-98PL crawler pipeliner/excavator is the standard and most respected performer in its class. Users recognize and accept the model LS-98PL for its durability plus production capabilities.

The tractor-type crawler mounting was specially designed for extensive machine travel, traction on uneven terrain, and with the strength to withstand pipeline excavator work. Two-speed travel is standard.

The LS-98PL lower frame, side frames, and the outboard bearing support for the drive chain sprocket are welded integrally for greater strength. After welding, the integrally welded frame is stress relieved to free the structure from locked-in welding stresses and, finally, line bored for mounting of the horizontal travel shaft. The travel shaft with steer, travel, and brake mechanism is enclosed within the lower frame.

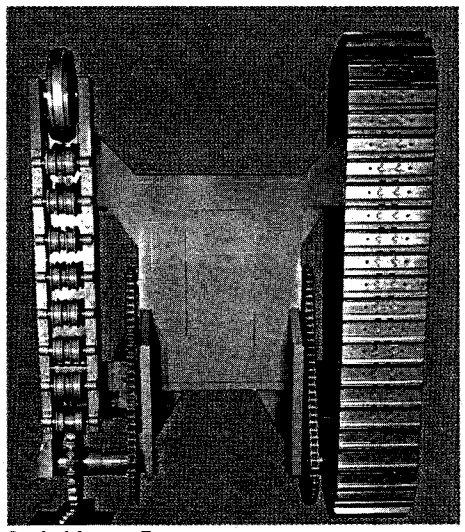

Sealed Lower Frame

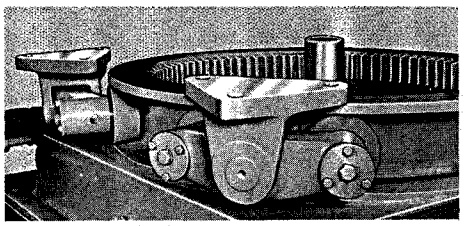

Conical Hook Rollers

The underside of the crawler mounting, or **lower frame, is covered and sealed.** The LS-98PL has a high frame-to-ground clearance of 26″.

The track assembly consists of heavy-duty rails, pins, and bushings. The grouser shoes are bolted to the heavy-duty track rails. The integral track-chain sprocket, track idler roller, and track rollers are all mounted on **sealed roller bearings** for lifetime lubrication.

The over-all crawler length is 15′ 7″. Over-all crawler width with 30″ wide grouser shoes is 11′ 6″.

Hardened, **conical hook rollers**, mounted on anti-friction bearings, join the revolving superstructure to the crawler mounting. Rollers, mounting brackets, and roller path are all heat treated for long, trouble-free service. Rollers are shim adjusted for wear.

Exclusive Spring-Compensating Track Idler System

With "Grease Gun" Track Adjustment

GENERAL INFORMATION ONLY

Incorporated in the design of the LS-98PL tractor-type crawler mounting is FMC's exclusive **spring-compensating track idler system** for longer over-all track component life. The two advantages of the unique system are automatic relief of excessive track tension and simple idler-yoke grease gun track take-up. The compensating single spring assembly is fully enclosed within each side frame and sealed in oil.

Initial "track/idler" adjustment on a new machine is shown in **illustration (A)**. For normal track wear, the track idler is "grease gun" adjusted as shown in **illustration (B)**. Adding grease in the grease cylinder forces the yoke and idler forward for proper track tension. A safety relief valve in the hydraulic grease system prevents the track from being over tightened. If a **foreign object** should become wedged between the track rail and idler or sprocket as shown in **illustration (C)**, the idler/yoke assembly will move back, compressing the **single compensating spring**. When the foreign object dislodges from the track, the spring will return the idler to its previous position. The design of the single spring and guided yoke avoids cocking of the idler.

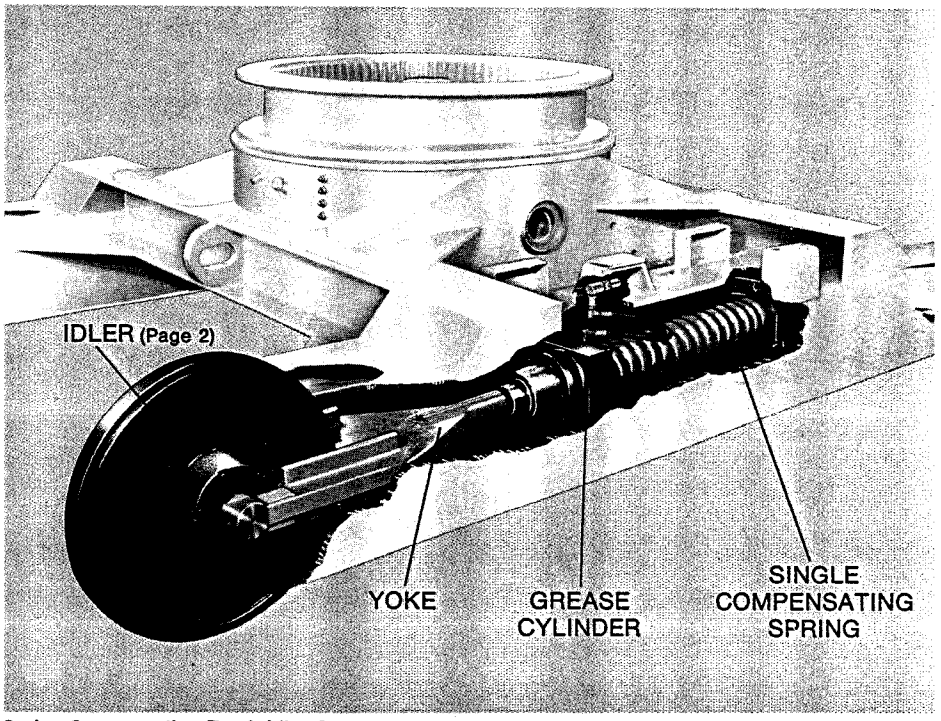

Spring-Compensating Track Idler System

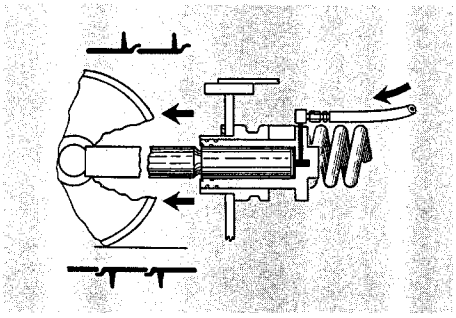

Illustration (A)

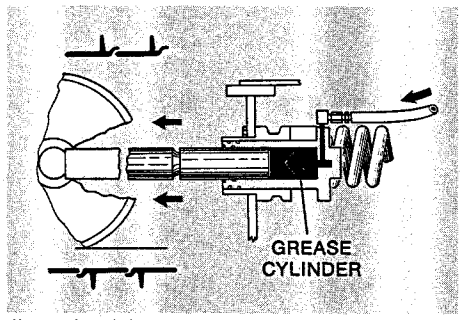

Illustration (B)

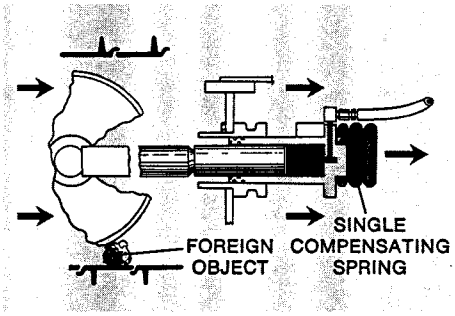

Illustration (C)

For quick, well controlled, on-the-job moves, Link-Belt® excavators are equipped with **power hydraulic steer.** The steer-travel mechanism on the LS-98PL is completely enclosed within the frame. Jaw clutches **(A)** are engaged through power hydraulics. When jaw clutches are fully engaged, or preloaded, spring applied brakes **(B)** are automatically released.

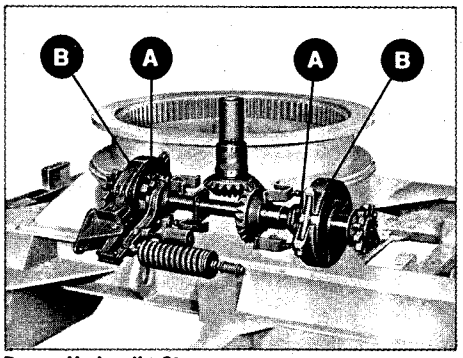

Power Hydraulic Steer

Jaw clutches **(A)** are engaged independently for steer by either of two steer control levers. They can be engaged simultaneously for straightline travel by either the two steer levers or the push button control located on the travel clutch control lever. Travel/steer power is through engagement of a 2-shoe hydraulic clutch mounted in the revolving superstructure. When jaw clutches **(A)** are released, brakes **(B)** are automatically spring applied. Brakes **(B)** also act as digging brakes.

Exclusive Full-Function Upper Design Ideal For Pipeline Excavation

Performs All Functions Independently Or Simultaneously

GENERAL INFORMATION ONLY

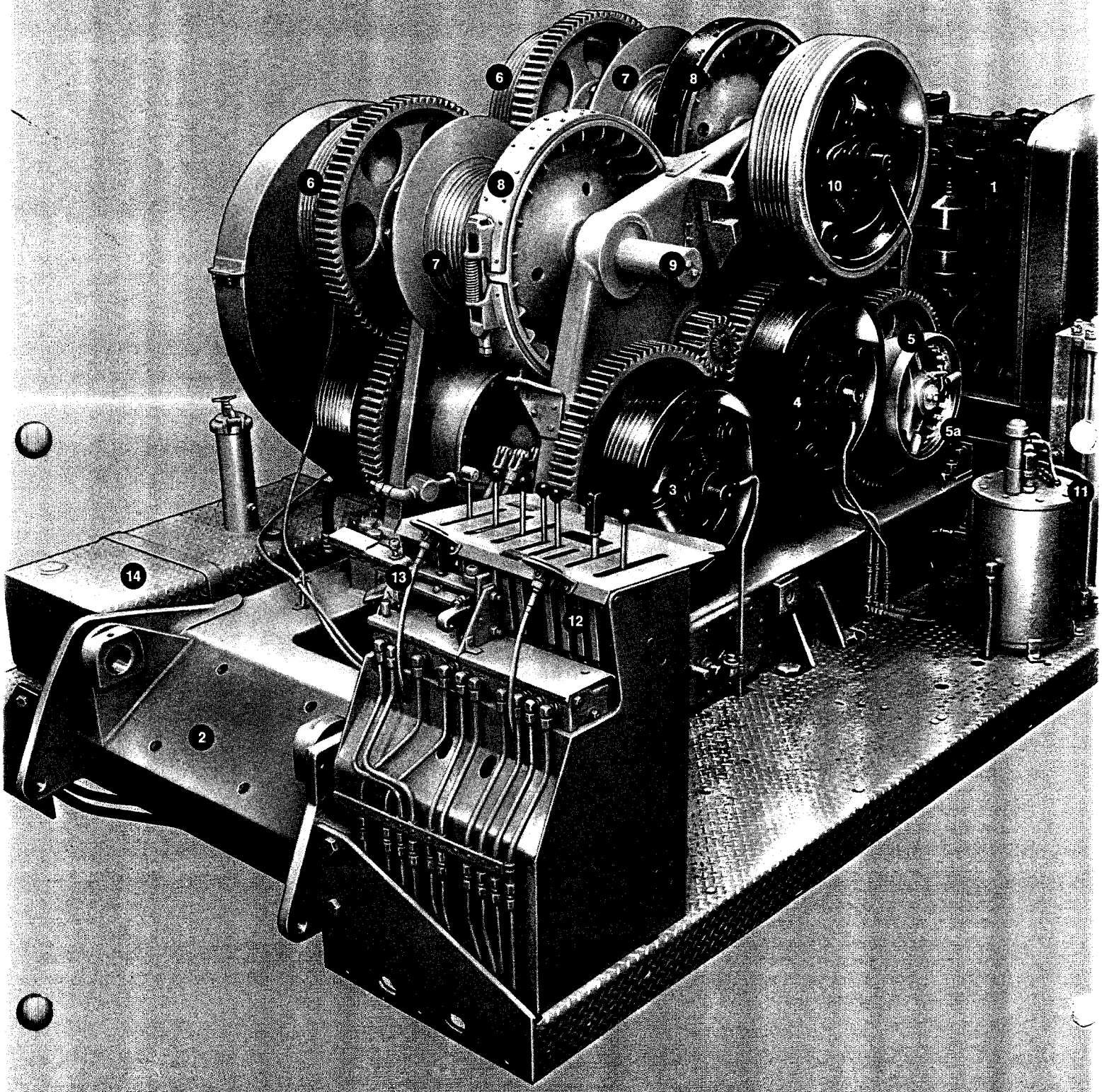

ENERAL INFORMATION ONL

1. **ENGINE:** Diesel engines equipped with friction clutch or hydraulic coupling.
2. **UPPER FRAME:** Fixture welded and stress relieved for strength and durability; line bore accuracy for proper shaft and gear alignment. Results in less component wear and lower maintenance cost.
3. **TRAVEL:** Independent. Two-shoe clutches transmit travel power smoothly into the track sprockets. (Only the left-hand cluch is visible.) Two-speed travel is standard.
4. **SWING:** Independent. Two-shoe clutches transmit swing power smoothly into the swing pinion. (Only left-hand clutch and drum are visible.)
5. **BOOM HOIST:** Independent, gear driven. Boom raising is with a 2-shoe clutch (not visible) mounted on right end of shaft. Boom lowering through a ratchet/pawl assembly **(5a)** with a 2-shoe clutch optional.
6. **HOIST CLUTCHES:** Two-shoe hoist clutches for front and rear rope drums. (Clutch drums only visible.)
7. **ROPE DRUM LAGGINGS:** Front and rear, bolted to brake drum.
8. **DRUM BRAKES:** Mechanically operated by foot pedals. Separated from hoist clutches (item 6) to eliminate heat transfer, resulting in cooler drum brakes and clutches for longer component life of both. Brake drum splined to drum shaft.
9. **EXTENDED FRONT DRUM SHAFT:** To accommodate installation of an optional power load lowering clutch. (See photo page 7.)
10. **AUXILIARY 2-SHOE REAR DRUM BRAKE:** Power hydraulically applied with control valve interconnected with the standard drum band brake (item 8) for simultaneous engagement of both drum brake band and shoes. Nearly doubles effective braking area.
11. **POWER PACKAGE FOR POWER HYDRAULIC CONTROLS:** Vane-type pump, belt driven from engine. Piston-type accumulator and sump tank; normal system operating pressure is 900 to 1,050 p.s.i.
12. **CONTROL CONSOLE:** Exclusive Speed-o-Matic® power hydraulic controls, time-tested and proven throughout the world.
13. **BOOM HOIST LIMITING DEVICE:** When the LS-98PL is equipped with crane boom attachment and the boom is raised closer than minimum radius, this mechanism acts to disengage the crane boom raising clutch with simultaneous engagement of the boom hoist brake.
14. **AUXILIARY FUEL TANK:** One of two tanks. (Tank located under engine is not visible.)

For superb control of all the machine functions, the LS-98PL incorporates the famous Speed-o-Matic® power hydraulic control system. This system is unaffected by day-to-day atmospheric variations and does not require priming or bleeding. Oil under pressure from the belt-driven, vane-type pump and from the pressure accumulator storage tank does the work. Normal system operating pressure is 900-1,050 p.s.i. The accumulator is pre-charged with dry nitrogen to 650 p.s.i.

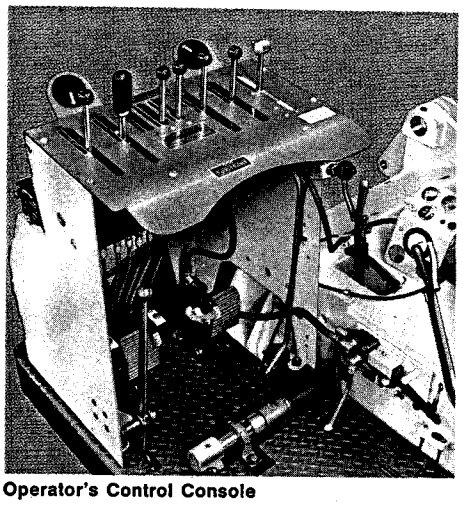

Operator's Control Console

Short-throw levers in **operator's control console** actuate variable pressure valves from which oil under pressure is metered to the various hydraulic cylinders for prompt, positive engagement of a **2-shoe clutch** or other function. Speed-o-Matic power hydraulics — the exclusive control system that permits the use of 2-shoe clutches for control of swing, travel, boom, and rope drums.

The power hydraulic **2-shoe clutch** is self-compensating over a wide range of lining wear and heat expansion, and is separated from the rope drum brake to eliminate heat transfer between them for longer clutch and brake lining life. Clutches can be engaged to any degree for smooth acceleration of swing, hoist, etc. For maximum rope pull, the clutch can be fully engaged by complete application, or toggling in, of the control lever.

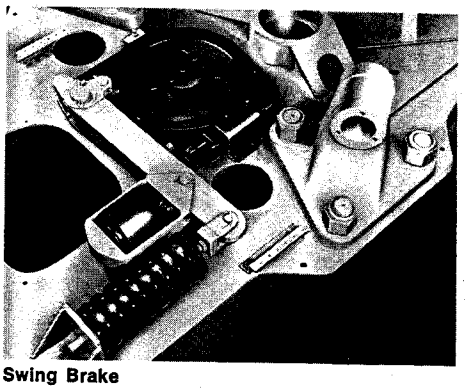

Swing Brake

The **swing brake** is spring applied or power hydraulically released (under control of the operator). Acts to hold upper and attachment at any swing position, or it can be partially engaged for a slight drag to control side drift when positioning the bucket. Swing brake is controlled from operator's position through variable pressure control valve. A mechanical swing lock is also standard equipment.

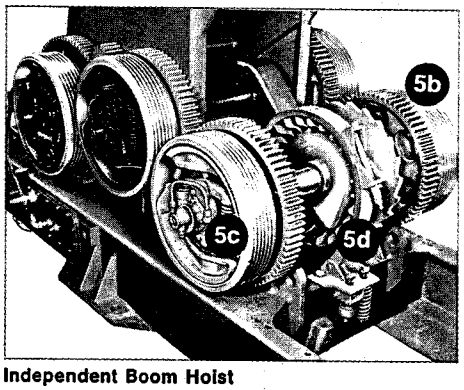

Independent Boom Hoist

The gear-driven, **independent boom hoist** offers power hydraulic, 2-shoe clutch control **(5b**, with only clutch drum visible**)** for boom raising. Also, 2-shoe clutch control **(5c)** for boom lowering is optional, replacing the ratchet/pawl assembly (item 5a shown on photo page #4). The boom hoist rope drum brake **(5d)** is automatically spring applied and power hydraulically released. A manually controlled rope drum locking pawl is standard.

Optional Hoe Arm With Hydraulic Digging Bucket Attachment

LS-98PL Is A Proven Machine With Digging Power

GENERAL INFORMATION ONLY

The Link-Belt® LS-98PL pipeliner/excavator with Full-Function upper machinery design, tractor-type mounting, and durable hoe attachment continues to uphold its world-wide reputation for versatility, reliability, and superior day-to-day performance.

The all-welded boom and arm are box-section design for durability. All sheaves are heat treated, ductile iron for longer sheave and rope life. Extra-wide mouth inhaul rope deflector rollers, mounted near the boomhead, deflect inhaul rope when the arm is in an extended or maximum reach position. Pitch brace, located at front of bucket, is arched for faster filling and dumping of heaped bucket loads. Dual, telescoping mast backstops are standard.

To further increase the performance of the LS-98PL, an optional arm with hydraulic digging bucket is available when machine is equipped with friction clutch drive. The front (inhaul) rope drum horsepower is balanced with the **hydraulic bucket power** to permit changing the bucket angle while inhauling the arm. This results in more efficient use of available engine horsepower for faster bucket fill, greater bucket versatility in the ditch, plus a wider range of bucket dump heights. **Hydraulic bucket power** is from the 50 g.p.m. gear-type pump **(C)** coupled to the engine clutch output shaft. Hydraulic oil, stored in reservoir **(A)** located inside the right cab extension, flows to the pump through line **(B)**. The pump **(C)** directs oil through line **(D)** to a single-spool control valve (not visible) located behind the oil reservoir **(A)**. The control valve is actuated by a solenoid valve which is operator controlled by a **toggle switch** mounted on top of swing control lever. The control valve directs oil to the double-acting cylinder mounted on top of the arm. **Bucket wrist action** is 117°. The auxiliary, 2-shoe rear drum brake (item 10, page 4) is standard with the Link-Belt LS-98PL pipeliner/excavator.

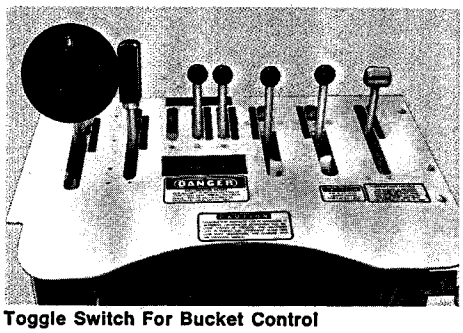

Toggle Switch For Bucket Control

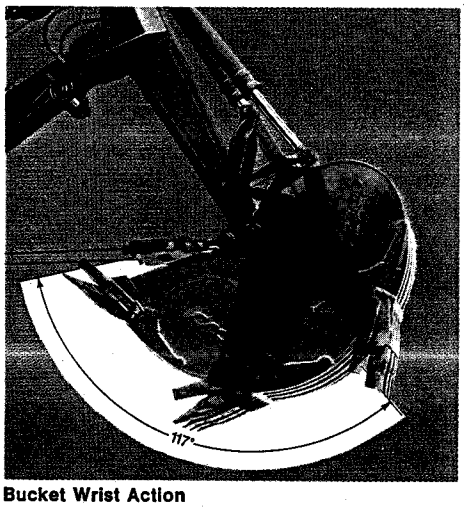

Bucket Wrist Action

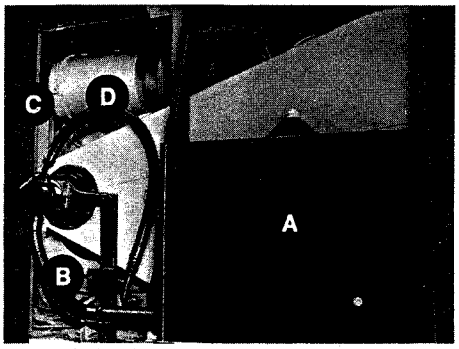

Hydraulic Bucket Power

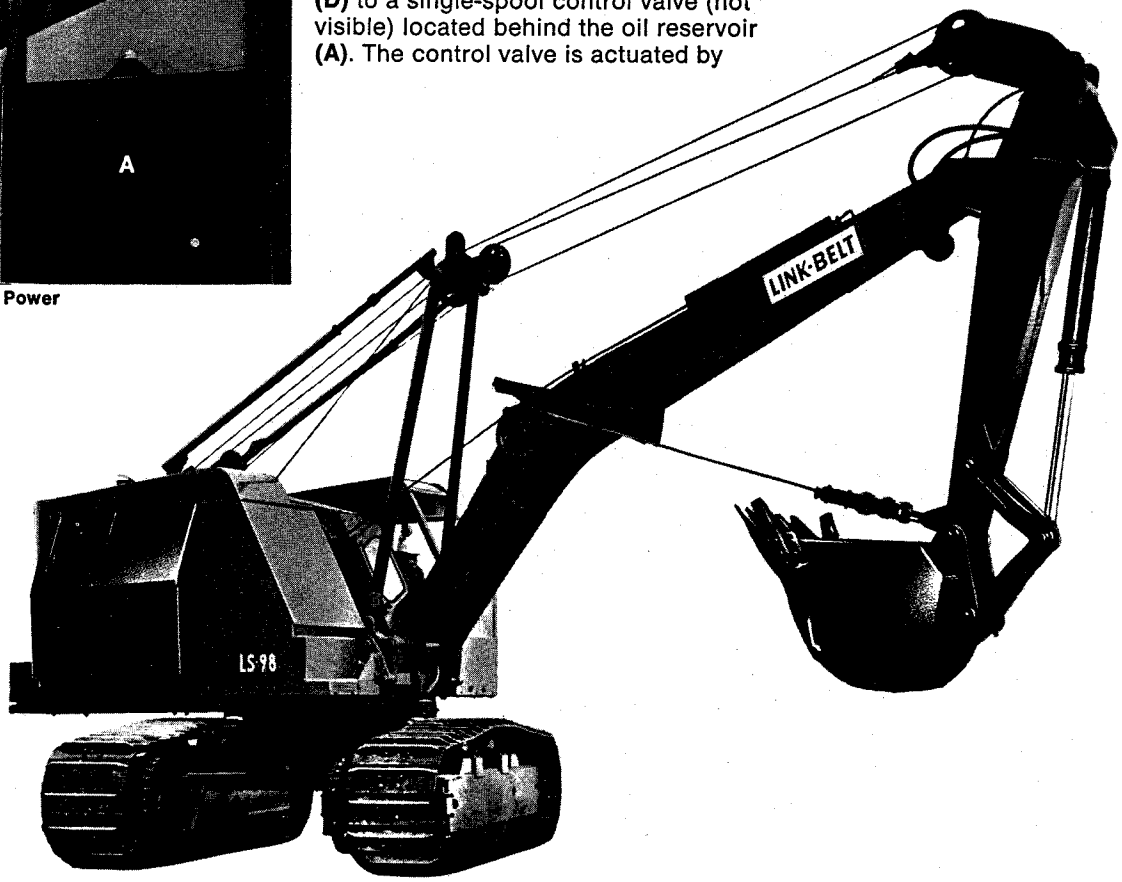

The LS-98PL Pipeliner/Excavator Offers Crane Boom Versatility

Plus Wide Choice Of Options

GENERAL INFORMATION ONLY

The rope-operated model LS-98PL offers hoe/crane boom attachment convertibility. The machine can be quickly converted from a hoe to **backfill**, **clamshell**, dragline, or lifting crane — another demonstration of its job flexibility and versatility.

For **high-speed trench backfilling** with crane boom attachment, **2-speed front and rear rope drums** are available. Standard speed for swing, travel, and boom hoist is retained. Intermediate gears are installed on the operator's side of the machine causing clutch drums **(B)** to revolve in the same direction as the standard hoist/inhaul clutch drums **(A)** but at twice the speed — giving up to 300 f.p.m. inhaul and hoist rope speed. Pulling the hoist and inhaul control lever will give standard rope speed; pushing the hoist and inhaul control lever forward will give high rope speed. This high-speed drum option, along with independent travel, is ideal for backfilling.

Independent front **(C)** and rear **(D)** drum 2-shoe power **load lowering** (reversing) **clutches** are available.

The extended front drum shaft (item 9 page 4) may be equipped with either the optional high speed inhaul clutch **(B)** or load lowering clutch **(C).** The rear drum shaft may be equipped with either the standard auxiliary 2-shoe brake (item 10 page #4) or the optional high speed hoist clutch **(B),** or the load lowering clutch **(D).** For field conversion, details are available from the service department.

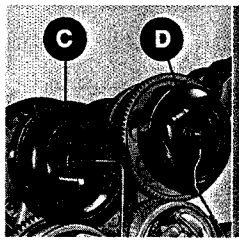

Load Lowering Clutches

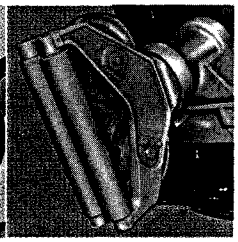

Full-Revolving Fairlead

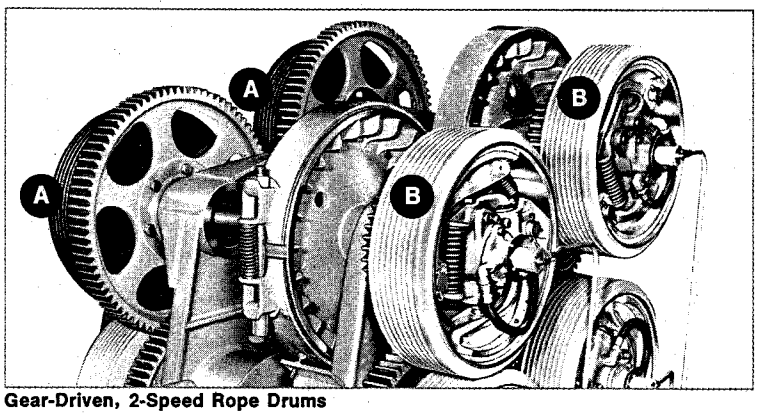

Gear-Driven, 2-Speed Rope Drums

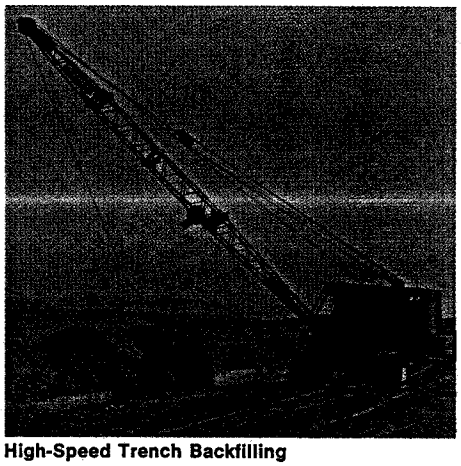

High-Speed Trench Backfilling

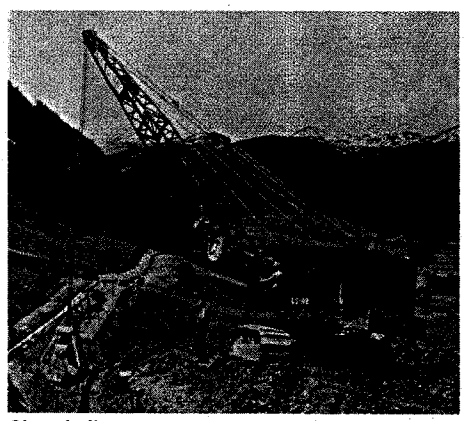

Clamshell

For dragline operation, the optional **full-revolving fairlead** rotates to insure inhaul rope support in all positions. All moving parts are mounted on anti-friction bearings. Increases inhaul rope life; permits greater economy.

The crane boompeak sheaves are mounted on anti-friction bearings, eliminating the need for daily lubrication. Single and double sheaves are available.

The **retractable gantry** (optional) is required for crane boom lengths exceeding 55′, reducing boom compression loadings. With boom resting on the ground, the retractable gantry can be raised or lowered under boom hoist power.

Retractable Gantry

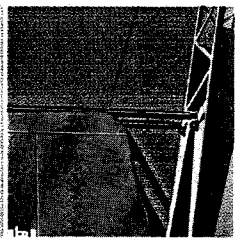

Crane Boom Stops

Dual, non-telescopic type crane **boom stops,** each with spring loaded bumpers, are standard.

The crane angle boom is pin connected, with only bolt connected optional.

Other options include lever-type hand throttle on swing control lever, third drum mechanism, elevated operator's cab, catwalk with overhead grab rail, cab heater and defroster fan, and electric windshield wiper.

FMC

A Full Line Of Link-Belt®
Crawler Pipeliner/Excavators

Manufacturing, Sales and Service Outlets Throughout The World

GENERAL INFORMATION ONLY

FMC Corporation Crane and Excavator Division's reputation as one of the world's leading crane/excavator manufacturers is built on its development of the broadest line to meet specific requirements of many different industries and in many different countries.

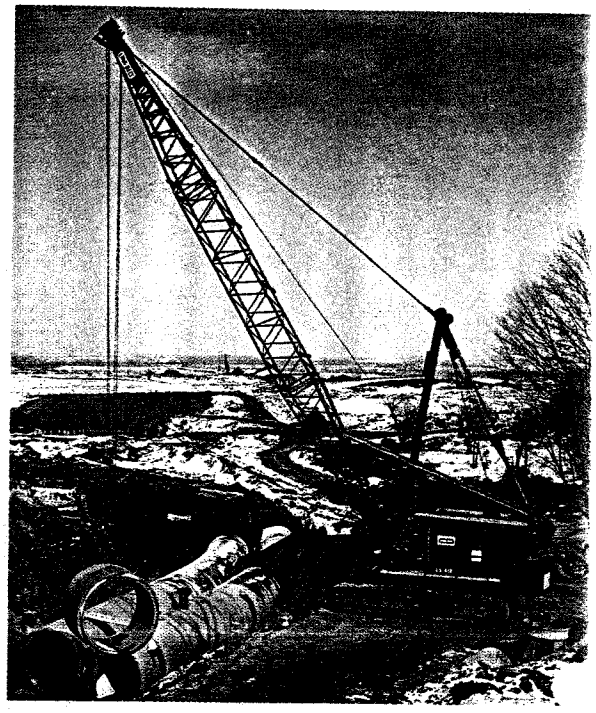

Link-Belt pipeliners are specifically designed for the pipeline contractor who needs a durable, proven machine with digging power, plus capable of extensive traveling. Almost anywhere in the world, find a pipeline job and chances are you will find a Link-Belt pipeliner . . . rope or hydraulic operated.

Little wonder pipeline contractors always think first of Link-Belt pipeliners, the world's most respected name in the industry.

Link-Belt cranes/excavators are manufactured in the United States, Canada, Mexico, Italy, and Japan. And, there's world-wide availability and service through a global network of distributors.

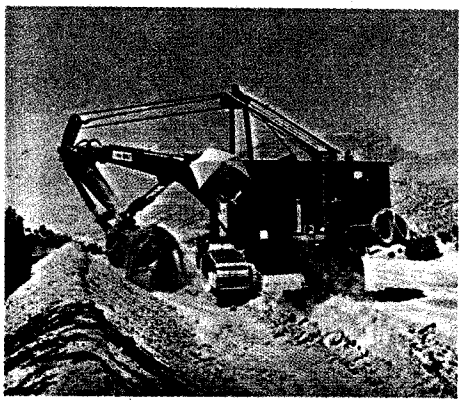

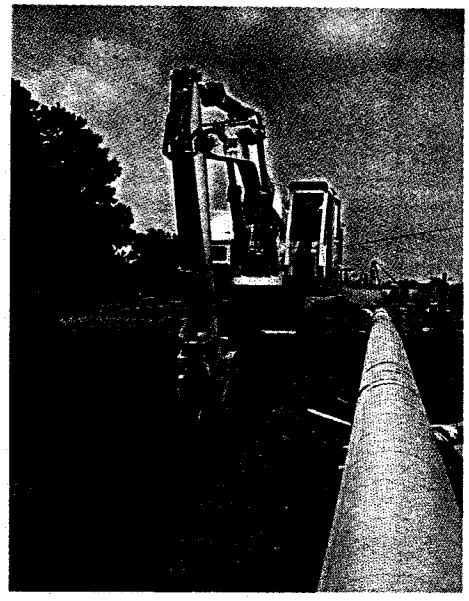

We are constantly improving our products and therefore reserve the right to change designs and specifications.

FMC Corporation Crane and Excavator Division Cedar Rapids Iowa 52406 Plants In: Ontario Canada • Milan Italy • Queretaro Mexico

166-10-74

Printed in U.S.A.

FMC

Link-Belt®

LS-98 Pipeliner

crawler excavator/crane

GENERAL INFORMATION ONLY

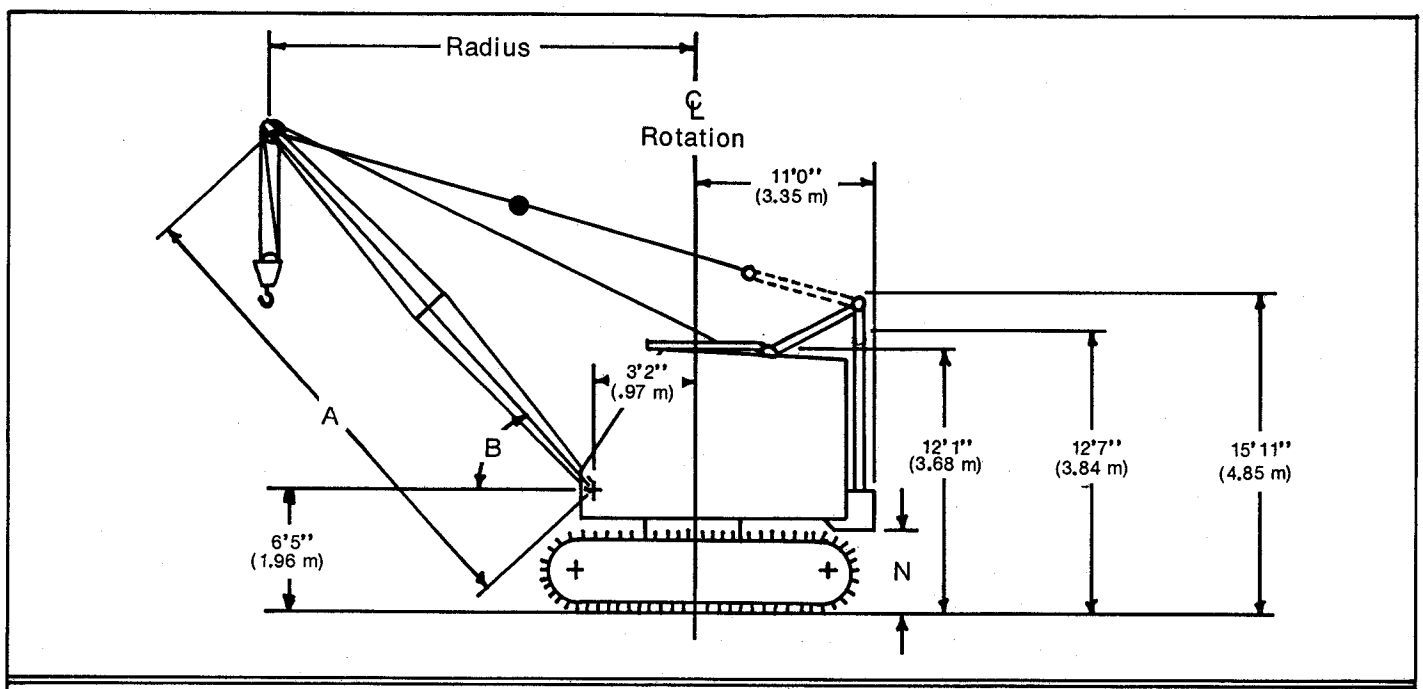

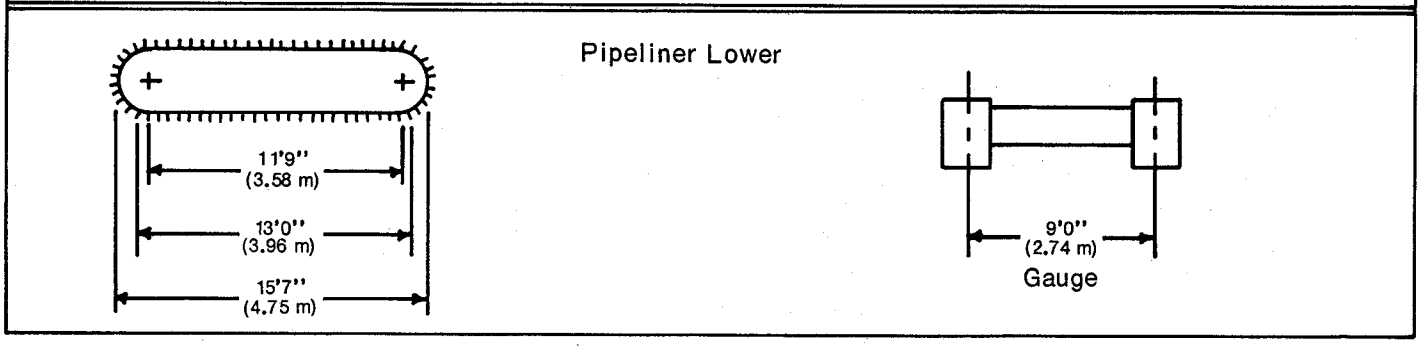

General Dimensions

		Pipeliner Lower	
		Feet	Meters
Basic boom length	A	40′ 0″	12.19
Boom angle	B	—	—
Clearance (ctwt. "A")	N	4′ 9″	1.45
Clearance (ctwt. "AB")	N	4′ 3″	1.30
Clearance (ctwt. "ABC")	N	4′ 0″	1.22
Minimum ground clearance	—	2′ 2″	.66
Over-all width with 30″ (.76 m) wide grouser shoes	—	11′ 6″	3.51
Width of cab	—	8′ 0″	2.44

08611757.5
(Supersedes LS-98 Pipeline Lower Spec's. #CRS4161-2-66)

Printed in U.S.A.

Machine Working Weights — Approximate

Based on std. machine including GM4-71N diesel engine with friction clutch, auxiliary fuel tank, 6 hook rollers, independent boomhoist w/lowering ratchet, auxiliary rear drum brake, independent swing and travel, instant travel, swing brake, low gantry, necessary drum laggings, ctwt. "A", 30" (.76 m) wide single grouser shoes.	Pipeliner Lower	
	Pounds	Kilograms
Hoe — including ctwt. "A", necessary hoist and inhaul wire ropes, 1¼ cu. yd. (.96 cu. m.) Esco bucket with Esco tooth type side cutters for 47" (1.19 m) cutting width and 20' (6.10 m) boom.	73,540	33,358
Hoe — same as above hoe except including either GM6-71N or Cat. 3306T engine w/friction clutch, ctwt. "AB" and complete hydraulic system and bucket cylinder.	79,850	36,220
Dragline — including ctwt. "AB", necessary hoist and inhaul wire ropes but no bucket, and 60' (18.29 m) angle boom.	73,015	33,120
Clamshell — including ctwt. "AB", necessary holding (hoist) and closing wire ropes but no bucket or tagline winder, and 60' (18.29 m) angle boom.	72,435	32,857
Maximum Lifting Crane — including power load lowering clutches on both front and rear drums, retractable high gantry, ctwt. "ABC", 8 hook rollers, necessary load hoist wire rope on rear drum, and 60' (18.29 m) angle boom.	78,385	35,555

GENERAL INFORMATION ONLY

General specifications

Crawler Mounting

Lower Frame — All-welded, stress relieved, precision machined; line bored for horizontal traction shaft. Special cover plates under lower seal and protect lower machinery components. Tow hooks provided on both ends of lower frame.

Roller Path With Integral Ring (Swing) Gear — Double flanged, machined roller path. Swing pinion meshes with internal ring gear.

Horizontal Traction Shaft — Two-piece, joined by involute splined coupling; shaft mounted on bronze bushings in lower frame; powered through bevel gears, enclosed in oil. Travel/steer jaw clutches involute splined to shaft; all shaft components mounted within lower frame. Sprockets on outer ends of shaft, chain drive the track chain sprockets at inside rear of each crawler side frame.

Power Hydraulic Steer/Travel — Jaw clutches splined to traction shaft power hydraulically engaged with jaws on brake drums, releasing spring-applied steer/digging brakes. Brake drums splined to drive sprocket hub. Brakes are not released until jaw clutches are preloaded or fully engaged.

Instant Travel — Standard. Pushbutton control mounted on travel control lever at operator's position in cab. As operator actuates travel control lever, he depresses the pushbutton which actuates an electrical solenoid. Solenoid controlled valve directs Speed-o-Matic® hydraulic oil to release both travel brakes simultaneously as travel jaw clutches are engaged. Permits instant straight-line travel either forward or reverse.

Crawler Side Frames — Fabricated side frames welded integral with lower frame cross axles.

Track Drive Assembly — Heat treated track drive and chain drive sprockets welded integral, mounted on anti-friction bearings at rear end of each crawler side frame; sealed for lifetime lubrication.

Track Idler Roller (Wheel) — Heat treated rollers mounted on shaft on anti-friction bearings at front end of each crawler side frame; sealed for lifetime lubrication.

Track Adjustment — Hydraulically operated with hand grease gun. Contains pre-set relief valve to prevent overtightening track belts. Pre-loaded compensating springs for each track enclosed in oil.

Track Drive Chain Adjustment — Adjustment at drive end of crawler side frame by means of jack screw and shims.

Crawler Tracks — Tractor/chain type; track belts equipped with single bar grouser shoes; shoes bolted to 8½" (.22 m) pitch continuous chain. Each track belt equipped with two master link pins and locks.

Tracks — Equipped with forty-six 30" (.76 m) wide single bar grouser shoes per side frame. Ground contact area (neglecting grouser bars) — 65 sq. ft. (6.04 m²). Optional — 30" (.76 m) wide two bar grouser shoes. Optional — 23 flat, bolt-on street plates for each side frame (one for every other track shoe); recommended for intermittent service only.

Track Rollers — Heat treated, mounted on anti-friction bearings; sealed for lifetime lubrication. Seven dual type rollers and one single type roller per side frame. (Single type rollers mounted in front of track drive sprocket in each side frame.)

Track Carrier Rollers — Heat treated, mounted on anti-friction bearings; sealed for lifetime lubrication. Two dual type rollers per side frame.

Travel Speed — Two speed standard; low speed, .86 m.p.h. (1.39 km/hr.); high speed, 1.95 m.p.h. (3.14 km/hr.).

Link-Belt® LS-98 Pipeliner lifting crane capacities

PCSA Class 10-79
Refer to **notes** below.

Boom — angle, 34" x 34" *(0.86 x 0.86 m)* with open throat top section and dual 1⅛" *(29 mm)* diameter boom pendants.

Mounting — crawler; 9' 0" *(2.74 m)* gauge, 15' 7" *(4.75 m)* overall length.

Counterweights — refer to engine/counterweight chart below.

Engine	Counterweights					
	"A"		"AB"		"ABC"	
	Pounds	*kilograms*	Pounds	*kilograms*	Pounds	*kilograms*
GM4-71N	6,650	*3 016*	11,070	*5 021*	14,220	*6 450*
Cat. 3306-T	5,750	*2 608*	10,170	*4 613*	13,320	*6 042*

Boom						Counterweight "AB"		Counterweight "ABC"	
Length	Radius		Angle	Boom point height①					
	Feet	*meters*	Degrees	Feet	*meters*	Pounds	*kilograms*	Pounds	*kilograms*
40' *(12.19 m)*	10	*3.05*	80.2	45' 10"	*13.97*	54,770	*24 843*	60,770	*27 564*
	12	*3.66*	77.2	45' 5"	*13.85*	39,760	*18 034*	44,160	*20 030*
	15	*4.57*	72.8	44' 8"	*13.60*	27,970	*12 686*	31,120	*14 115*
	20	*6.10*	65.1	42' 8"	*13.02*	18,460	*8 373*	20,590	*9 339*
	25	*7.62*	56.9	39' 11"	*12.17*	13,590	*6 164*	15,200	*6 894*
	30	*9.14*	47.9	36' 1"	*11.00*	10,630	*4 821*	11,930	*5 411*
	35	*10.67*	37.3	30' 8"	*9.34*	8,640	*3 919*	9,730	*4 413*
	40	*12.19*	23.0	22' 0"	*6.71*	7,210	*3 270*	8,140	*3 692*
50' *(15.24 m)*	12	*3.66*	79.8	55' 8"	*16.96*	39,540	*17 935*	43,940	*19 930*
	15	*4.57*	76.3	55' 0"	*16.76*	27,740	*12 582*	30,880	*14 006*
	20	*6.10*	70.3	53' 6"	*16.31*	18,220	*8 264*	20,340	*9 226*
	25	*7.62*	64.1	51' 5"	*15.67*	13,340	*6 050*	14,950	*6 781*
	30	*9.14*	57.5	48' 7"	*14.82*	10,380	*4 708*	11,670	*5 293*
	35	*10.67*	50.5	45' 0"	*13.71*	8,380	*3 801*	9,470	*4 295*
	40	*12.19*	42.6	40' 3"	*12.26*	6,950	*3 152*	7,880	*3 574*
	45	*13.72*	33.2	33' 10"	*10.31*	5,870	*2 662*	6,690	*3 034*
	50	*15.24*	20.5	23' 11"	*7.30*	5,030	*2 281*	5,760	*2 612*
60' *(18.29 m)*	15	*4.57*	78.6	65' 3"	*19.89*	27,500	*12 473*	30,640	*13 898*
	20	*6.10*	73.7	64' 0"	*19.51*	17,970	*8 151*	20,100	*9 117*
	25	*7.62*	68.7	62' 4"	*18.99*	13,090	*5 937*	14,690	*6 663*
	30	*9.14*	63.4	60' 1"	*18.31*	10,120	*4 590*	11,410	*5 175*
	35	*10.67*	58.0	57' 3"	*17.46*	8,120	*3 683*	9,210	*4 177*
	40	*12.19*	52.1	53' 9"	*16.39*	6,690	*3 034*	7,620	*3 456*
	45	*13.72*	45.8	49' 5"	*15.07*	5,610	*2 544*	6,430	*2 916*
	50	*15.24*	38.7	43' 11"	*13.39*	4,770	*2 163*	5,500	*2 494*
	55	*16.76*	30.3	36' 8"	*11.17*	4,100	*1 859*	4,750	*2 154*
	60	*18.29*	18.7	25' 8"	*7.82*	3,540	*1 605*	5,140	*1 877*

①Measured vertically from center of boom head sheave to ground.

Notes — lifting crane

1. The capacities included in this chart are the maximum allowable, and are based on machine standing level on firm supporting surface under ideal job conditions.
2. Capacities are based on 75% of tipping loads.
3. Capacities are based on freely suspended loads and make no allowance for such factors as the effect of wind, sudden stopping of loads, supporting surface conditions, and operating speeds. Operator must reduce load ratings to take such conditions into account. Deduction from rated capacities must be made for weight of hook block, weighted ball/hook, sling, spreader bar, or other suspended gear.
4. Least stable position is over the side.
5. For lifting maximum rated capacity, 5-parts of ¾" *(19 mm)* type "N" wire rope are required.
6. Retractable high gantry must be fixed in raised position for boom lengths over 55' *(16.76 m)*.
7. Main boom length must not exceed 60' *(18.29 m)*.
8. For maximum lifts the front and rear track sprockets must be blocked between shoe and ground.
9. These capacities apply only to the machine as originally manufactured and normally equipped by FMC Corporation, Cable Crane and Excavator Division.

GENERAL INFORMATION ONLY

FMC

LS-98 Pipeliner dragline/clamshell/magnet capacities

Refer to **notes** below.

Boom — angle, 34" x 34" *(0.86 x 0.86 m)* with open throat top section and dual 1⅛" *(29 mm)* diameter boom pendants.

Mounting — crawler; 9' 0" *(2.74 m)* gauge, 15' 7" *(4.75 m)* overall length.

Counterweights — Refer to chart on page 1.

Boom						Counterweight "A"				Counterweight "AB"			
	Radius		Angle	Boom point height①		Dragline		Clamshell-magnet		Dragline		Clamshell-magnet	
Length	Feet	*meters*	Degrees	Feet	*meters*	Pounds	*kilograms*	Pounds	*kilograms*	Pounds	*kilograms*	Pounds	*kilograms*
40' *(12.19 m)*	10	*3.05*	80.2	45' 10"	*13.97*	—	—	13,600	*6 168*	—	—	13,600	*6 168*
	12	*3.66*	77.2	45' 5"	*13.85*	—	—	13,600	*6 168*	—	—	13,600	*6 168*
	15	*4.57*	72.8	44' 8"	*13.60*	—	—	13,600	*6 168*	—	—	13,600	*6 168*
	20	*6.10*	65.1	42' 8"	*13.02*	—	—	13,600	*6 168*	—	—	13,600	*6 168*
	25	*7.62*	56.9	39' 11"	*12.17*	11,330	*5 139*	10,200	*4 626*	11,800	*5 352*	12,210	*5 538*
	30	*9.14*	47.9	36' 1"	*11.00*	8,810	*3 996*	7,940	*3 601*	10,630	*4 821*	9,550	*4 331*
	35	*10.67*	37.3	30' 8"	*9.34*	7,120	*3 229*	6,410	*2 907*	8,640	*3 919*	7,760	*3 519*
	40	*12.19*	23.0	22' 0"	*6.71*	—	—	5,310	*2 408*	—	—	6,500	*2 948*
50' *(15.24 m)*	12	*3.66*	79.8	55' 8"	*16.96*	—	—	13,600	*6 168*	—	—	13,600	*6 168*
	15	*4.57*	76.3	55' 0"	*16.76*	—	—	13,600	*6 168*	—	—	13,600	*6 168*
	20	*6.10*	70.3	53' 6"	*16.31*	—	—	13,600	*6 168*	—	—	13,600	*6 168*
	25	*7.62*	64.1	51' 5"	*15.67*	—	—	9,950	*4 513*	—	—	12,000	*5 443*
	30	*9.14*	57.5	48' 7"	*14.82*	8,550	*3 878*	7,690	*3 488*	10,380	*4 708*	9,350	*4 241*
	35	*10.67*	50.5	45' 0"	*13.71*	6,860	*3 111*	6,180	*2 803*	8,380	*3 801*	7,540	*3 420*
	40	*12.19*	42.6	40' 3"	*12.26*	5,640	*2 558*	5,070	*2 299*	6,950	*3 152*	6,250	*2 834*
	45	*13.72*	33.2	33' 10"	*10.31*	4,730	*2 145*	4,250	*1 927*	5,870	*2 662*	5,280	*2 394*
	50	*15.24*	20.5	23' 11"	*7.30*	—	—	3,600	*1 632*	—	—	4,530	*2 054*
60' *(18.29 m)*	15	*4.57*	78.6	65' 3"	*19.89*	—	—	13,600	*6 168*	—	—	13,600	*6 168*
	20	*6.10*	73.7	64' 0"	*19.51*	—	—	13,450	*6 100*	—	—	13,600	*6 168*
	25	*7.62*	68.7	62' 4"	*18.99*	—	—	9,740	*4 417*	—	—	11,760	*5 334*
	30	*9.14*	63.4	60' 1"	*18.31*	—	—	7,450	*3 379*	—	—	9,120	*4 136*
	35	*10.67*	58.0	57' 3"	*17.46*	6,600	*2 993*	5,940	*2 694*	8,120	*3 683*	7,300	*3 311*
	40	*12.19*	52.1	53' 9"	*16.39*	5,380	*2 440*	4,850	*2 199*	6,690	*3 034*	6,010	*2 726*
	45	*13.72*	45.8	49' 5"	*15.07*	4,460	*2 023*	4,020	*1 823*	5,610	*2 544*	5,050	*2 290*
	50	*15.24*	38.7	43' 11"	*13.39*	3,750	*1 700*	3,380	*1 533*	4,770	*2 163*	4,300	*1 950*
	55	*16.76*	30.3	36' 8"	*11.17*	3,170	*1 437*	2,850	*1 292*	4,100	*1 859*	3,690	*1 673*
	60	*18.29*	18.7	25' 8"	*7.82*	—	—	2,430	*1 102*	—	—	3,190	*1 446*

①Measured vertically from center of boom head sheave to ground.

Notes — dragline/clamshell/magnet capacities

1. The capacities included in this chart are the maximum allowable and are based on machine standing level on firm supporting surface under ideal job conditions.
2. Capacities are not more than 75% of tipping loads for dragline; 67½% for clamshell/magnet.
3. Capacities are maximum recommended by PCSA Standard#1. User must make allowances for soft or uneven supporting surfaces, rapid cycle operations, bucket suction or other unfavorable conditions which may require smaller buckets or magnets for most efficient operation.
4. Weight of bucket or magnet, plus load, should not exceed these capacities.
5. Retractable high gantry must be fixed in raised position for boom lengths over 55' *(16.76 m)*.
6. Dragline operation with boom angle less than 35° is not recommended.
7. Boom length for dragline/clamshell/magnet operation should not exceed 60' *(18.29 m)*.
8. These capacities apply only to the machine as originally manufactured and normally equipped by FMC Corporation, Cable Crane and Excavator Division.

GENERAL INFORMATION ONLY

MEMBER PCSA POWER CRANE AND SHOVEL ASSOCIATION

We are constantly improving our products and therefore reserve the right to change designs and specifications.

FMC Corporation Cable Crane and Excavator Division Cedar Rapids Iowa 52406
Link-Belt® cranes & excavators manufactured in: Cedar Rapids Iowa • Lexington & Bowling Green Kentucky • Ontario Canada • Milan Italy • Queretaro Mexico & Nagoya Japan (Under license)

Upper Revolving Superstructure

Frame — All-welded, stress-relieved, precision machined unit. Side housings bolted to upper frame. Special cover plates under frame protect hydraulic tubing.

Turntable Rollers — Six adjustable, heat treated, conical, hook-type rollers mounted on anti-friction bearings. Two equalized pairs front, two single rear. Eight rollers optional - four equalized pairs; 2 front and 2 rear.

Transmission — Quadruple roller chain enclosed in oil-tight chain case with integral sump. Pump driven oil stream lubrication. Engine pinion and chain wheel have machine-cut teeth.

Reduction Shaft — Two-piece shaft, joined by involute splined coupling; mounted in line bored side housings on anti-friction bearings.

Drive Pinions — Two pinions; heat treated, machine-cut teeth, involute splined to shaft. Pinions mounted on shaft outside of machinery side housings.

Clutches — Speed-o-Matic® power hydraulic for all functions (other than engine master clutch). Internal expanding two-shoe type, aluminum alloy shoes; clutch drums, 20" (.51 m) dia., 5" (.13 m) face width. Third drum operating clutch drum 17¼" (.44 m) dia., 4" (.10 m) face width. Clutch drums bolted to spur gears.

Clutch Spiders — Involute splined to shafts.

Drums — Front and rear main, and optional third, operating drums.

Front Drum — Serves as inhaul drum for hoe and dragline, holding or closing drum for clamshell, and hoist drum for lifting crane.

Shaft — Mounted in line bores on anti-friction bearings. Extended to accommodate power load lowering clutches.

Spur Gear — Machine-cut teeth; mounted or anti-friction bearings on shaft.

Brake — Two-piece, external contracting band; mechanically foot pedal operated. Mechanical latch on brake foot pedal permits locking drum brake in applied position. Brake band 4" (.10 m) face width.

Brake Drum — Involute splined to shaft, 27" (.69 m) dia., 4½" (.11 m) face width.

Rear Drum — Serves as hoist drum for all attachments.

Shaft — Mounted in line bores on anti-friction bearings. Extended to accommodate auxiliary rear drum brake.

Spur Gear — Machine-cut teeth; mounted on anti-friction bearings on shaft.

Brake — Two-piece, external contracting band; mechanically foot pedal operated. Mechanical latch on brake foot pedal permits locking drum brake in applied position. Brake band 4" (.10 m) face width.

Brake Drum — Involute splined to shaft, 27" (.69 m) dia., 4½" (.11 m) face width.

Third Drum — Optional. Mounts forward of front operating drum. Functions as third operating drum with control and design similar to front and rear main operating drums. Descriptions of shaft, spur gear, clutch drum, brake drum, and brake are the same as those used on front and rear drums except brake drum band has 3" (76.20 mm) face width and brake drum has 18" (.46 m) dia. and 3½" (88.90 mm) face width. Mechanical latch on brake foot pedal permits locking drum brake in applied position.

Operational Limitations — Dragline; if equipped with third drum, all wire rope must be removed from third drum to avoid interference with inhaul rope (front drum). Minimum four wraps of inhaul rope must be left on anchor end of front drum to avoid inhaul rope interference with third drum brake enclosure. Crane; if equipped with third drum, quantity of front drum wire rope must be limited in some cases to avoid interference between front drum rope and third drum brake enclosure.

Drum Laggings — For front, rear, and optional third drums. Two-piece, removable; bolted to brake drum.

Planetary Drive Units for Front and Rear Drums — Optional. For hoist only on front and/or rear main drums. Planetary drive unit mounts between spur gear and 2-shoe clutch drum on extended shaft; provides 70% increase or 40% decrease of standard load hoist rope speeds. Not available for optional third operating drum.

Auxiliary 2-shoe Rear Drum Brake — Standard. Increases brake lining contact area. Pressure on mechanical brake pedal applies standard rear drum brake band and auxiliary 2-shoe brake simultaneously. Mechanical linkage actuates control mechanism of variable pressure valve to direct hydraulic pressure to auxiliary brake cylinder. Note: Power load lowering clutch or planetary drive unit on lowering (left) side for rear drum not available on machine equipped with auxiliary 2-shoe rear drum brake.

Drum Rotation Indicators — Standard for both front and rear main operating drums. Dial indicators mounted on control stand; dials actuated by flexible shaft drives attached to drum shafts.

Independent Boomhoist — Spur gear driven, with precision boom raising through clutch and boom lowering controlled by engine compression through ratchet and pawl mechanism. Precision lowering controlled through Speed-o-Matic® power hydraulic 2-shoe clutch is optional. Standard on all machines is an automatic boomhoist brake plus an operator controlled wire rope drum locking pawl.

Drum Shaft — Mounted in line bore on anti-friction bearings.

Spur Gears — Machine-cut teeth; mounted on anti-friction bearings.

Brake — External contracting band; spring applied, hydraulically released.

Rope Drum — Involute splined to shaft; single drum with grooved lagging standard.

Boomhoist Limiting Device — When properly adjusted, device prohibits booming up beyond pre-determined minimum operating radius. As boom approaches minimum radius, it contacts head of an adjusting bolt on rocker arm which mechanically returns boomhoist control lever to neutral position thus disengaging boomhoist clutch and causing simultaneous engagement (setting) of spring applied boomhoist brake.

Upper Machinery Power Train

Independent Swing/Travel — Standard. Includes two-speed travel.

Horizontal Travel Shaft — Mounted in line bore on anti-friction bearings.

Spur Gears — Machine-cut teeth; mounted on shaft on anti-friction bearings.

Bevel Gear — Involute splined to shaft; fully enclosed and running in oil.

Vertical Center Drive Shaft For Travel — Mounted on anti-friction bearings. Gears and jaw clutch fully enclosed and running in oil.

Bevel Gear — Heat treated, involute splined to shaft.

Jaw Clutch — Heat treated, involute splined to shaft. Clutch engages jaws on top side of spur gear beneath it to transfer power to vertical travel shaft for high speed travel.

Spur Gear — For high speed travel. Heat treated, machine-cut teeth; mounted on bronze bushings. Gear has integral clutch jaws on top side.

Spur Gear — For low speed travel. Heat treated, machine-cut teeth; involute splined to shaft.

Vertical Travel Shaft — Two-piece, tubular shaft; joined by splined sleeve, mounted on anti-friction bearings.

Spur Gear — For high speed travel. Heat treated, machine-cut teeth; involute splined to shaft. Gear has integral clutch jaws on bottom side.

Spur Gear — For low speed travel. Heat treated, machine-cut teeth; mounted on bronze bushings. Gear has integral clutch jaws on top side.

Bevel Gear — Heat treated; involute splined to shaft.

Horizontal Swing Shaft — Mounted in line bore on anti-friction bearings.

Spur Gears — Machine-cut teeth; mounted on anti-friction bearings; right-hand spur gear is heat treated.

Bevel Gear — Heat treated; involute splined to shaft; fully enclosed and running in oil.

Vertical Center Drive Shaft For Swing — Heat treated; mounted on anti-friction bearings. Gears enclosed and running in oil.

Bevel Gear — Heat treated; involute splined to shaft.

Brake Mounting — Mounted on lower end of extended vertical drive shaft for swing.

Swing Lock — Mechanically controlled pawl engages with internal teeth of ring (swing) gear.

Swing Speed — 4.07 r.p.m.

Control System — Speed-o-Matic® power hydraulics, a variable pressure system. Operating pressure is transmitted through oil to all operating two-shoe clutch cylinders, swing brake and boomhoist drum brake cylinders. System includes a pump to provide a constant flow of oil, an accumulator to maintain operating pressure, and variable pressure operator-controlled valves to regulate pressure to each clutch cylinder.

Pump — Vickers; rated at 4.7 gal. per minute (17.79 liters per minute) at 1,200 r.p.m.

Oil Filter — FMC; replaceable Skinner ribbon-type filter element.

Relief Valve — FMC; set to operate at 1,250 p.s.i. (88 kg/cm²).

Unloader Valve — FMC; set to unload pump at a maximum 1,050 p.s.i. (74 kg/cm²) and to load pump when pressure drops below 900 p.s.i. (63 kg/cm²).

Accumulator — FMC; piston-type, precharged with nitrogen gas to 650 p.s.i. (46 kg/cm²).

Sump Tank — FMC; 7 gal. (26.50 liters) capacity with air breather filter and oil strainer assembly.

Control Valves — FMC; variable pressure type.

Gantry — Mounted on upper revolving frame to rear of machinery side housings; supports boom suspension system.

Low Gantry — Standard.

Retractable Gantry — Optional, and required for booms over 55′ (16.76 m) long.

Bail — With standard low gantry, pinned to gantry frame. Contains three sheaves mounted on bronze bushings for 8-part boomhoist reeving.

Bail — With optional retractable gantry, pinned to gantry frame. Contains three sheaves mounted on non-metallic bushings for 8-part boomhoist reeving.

Cab — Operator's door, rear and front roll on ball bearing rollers. Full vision operator's compartment with safety glass panels. Standard equipment includes dry chemical fire extinguisher, electric horn warning device, roof-top access ladder, skid-resistant finish on roof, machinery guards, hinged machinery access doors, hand grab rails, and bubble-type level.

Elevated Operator's Cab — Optional — Cabs 2′ (.61 m), 4′ (1.22 m) and 7′ (2.13 m) higher than standard are available. Upper portions of 2′ (.61 m) and 4′ (1.22 m) elevated cabs hinged to reduce over-all clearance height. 7′ (2.13 m) elevated cab equipped with quick disconnect fittings in hydraulic control lines to facilitate removal of upper portion of cab to reduce over-all clearance height.

Optional Cab Accessories — Sound reduction material, steel window covers, electric windshield wiper, cab heater, defroster fan. (Cab heater and defroster fan not recommended for machine equipped with elevated cab. Sound reduction material and steel window covers for standard cab only.)

Catwalks — Optional; along operator's side and/or right-hand side of cab, with overhead grab rails.

Counterweights — Removable, held in place by "T"-bolts. May be power removed if machine is equipped with optional retractable high gantry.

Ctwt. "A" — Standard for hoe operation.

Ctwt. "AB" — Standard for hydraulic hoe, lifting crane, dragline, and clamshell operations.

Ctwt. "ABC" — Optional for lifting crane only.

Ctwt.	GM4-71N		GM6-71N① Cat. 3306-T	
	Pounds	Kilograms	Pounds	Kilograms
"A"	6,650	3,016	5,750	2,608
"AB"	11,070	5,021	10,170	4,613
"ABC"	14,220	6,450	13,320	6,042

①For machine equipped with hoe attachment with hydraulic digging bucket only.

GENERAL INFORMATION ONLY

Engines — Diesel. Full-pressure lubrication, oil filter, extra-deep oil pan, air cleaner, fuel filter, hand throttle, optional foot throttle and/or hand throttle (lever type) on swing control lever.

Specifications	GM4-71N	GM4-71N①	Cat. 3306-T	GM6-71N②
Number of cylinders	4	4	6	6
Bore and stroke — inches	4¼ x 5	4¼ x 5	4¾ x 6	4¼ x 5
— (mm)	108 x 127	108 x 127	120.7 x 152.4	108 x 127
Piston displacement — cu. in.	283.7	283.7	638	425.6
— (cm^3)	4,649.8	4,649.8	10,456.8	6,975.6
High idle speed — rpm	1,990	1,990	2,020	1,990
Engine rpm @ full load speed	1,850	1,850	1,890	1,850
Net engine h.p. @ full load speed	112	112	110	125
Peak torque — ft. lbs.	351	351	368	410
— (kgm)	48.54	48.54	50.89	56.70
Peak Torque — rpm	1,200	1,200	1,200	1,000
Electrical system	12-volt	12-volt	12-volt	12-volt
Batteries	2/6 volt	2/6 volt	2/12 volt	1/12 volt
Clutch or power take-off	Friction Twin Disc #SP111-HP-1	Hyd. coupling Twin Disc	Friction Twin Disc #SP111-HP-1	Friction Twin Disc #SP111-HP-1
Transmission				
No. chain wheel teeth	161	161	161	161
No. engine pinion teeth	17	17	17	17

① Twin Disc hydraulic coupling.
② For machine equipped with hoe attachment with hydraulic digging bucket only.

Fuel Tanks — 60 gal. (227.12 liters) capacity fuel tank with flame arrester fill unit, self-closing cap with locking eye for padlock, and fuel level gauge — mounted rear of machine under engine. Also standard is a 43 gal. (162.76 liters) capacity auxiliary fuel tank, equipped with same accessories, designed for mounting within cab in right front corner forward of chain wheel case.

GENERAL INFORMATION ONLY

Drum Wire Rope Capacities, Line Speed and Pull —
(Available line pull, not based on wire rope strength.)

Front Drum

Attachment	Wire Rope Diameter		Lagging		Type	Line Speed and Pull								Drum Capacity			
			Root Diameter			First Layer Rope				Full Drum Rope				First Layer		Full Drum	
						Line Speed		Line Pull		Line Speed		Line Pull					
	Inches	Milli-meters	Inches	Meters		F.P.M.	M/Min.	Lbs.	Kgs.	F.P.M.	M/Min.	Lbs.	Kgs.	Feet	Meters	Feet	Meters
Crane	⅝	15.88	13¼	.34	Smooth	149	45.42	23,200	10,533	283	86.26	12,200	5,539	66	20.12	993	302.67
						253	77.11	12,889	5,852	481	146.61	6,778	3,077				
Clamshell (closing)	¾	19.05	15¼	.39	Grooved	171	52.12	20,100	9,125	252	76.81	13,700	6,220	49	14.94	367	111.86
						291	88.70	11,167	5,070	428	130.45	7,611	3,455				
Dragline or Hoe	⅞	22.23	13¼	.34	Grooved	152	46.33	21,487	9,732	246	74.98	12,707	5,769	44	13.41	343	104.55
						258	78.64	11,909	5,407	418	127.41	7,059	3,205				

Note: First line in each category is standard machine.
Second line in each category is machine equipped with planetary-driven high speed drum.

Drum Wire Rope Capacities, Line Speed and Pull —
(Available line pull, not based on wire rope strength.)

Rear Drum

Attachment	Wire Rope Diameter		Lagging			Line Speed and Pull								Drum Capacity			
			Root Diameter		Type	First Layer Rope				Full Drum Rope				First Layer		Full Drum	
						Line Speed		Line Pull		Line Speed		Line Pull					
	Inches	Milli-meters	Inches	Meters		F.P.M.	M/Min.	Lbs.	Kgs.	F.P.M.	M/Min.	Lbs.	Kgs.	Feet	Meters	Feet	Meters
Crane	⅝	15.88	13¼	.34	Smooth	149	45.42	23,200	10,524	283	86.26	12,200	5,534	66	20.12	993	302.67
						253	77.11	12,889	5,846	481	146.61	6,778	3,075				
Clamshell, Dragline, or Hoe	¾	19.05	15¼	.39	Grooved	171	52.12	19,600	8,891	252	76.81	13,300	6,033	58	17.68	451	137.46
						291	88.70	10,889	4,939	428	130.45	7,389	3,352				

Note: First line in each category is standard machine.
Second line in each category is machine equipped with planetary-driven high speed drum.

Boomhoist Drum

Wire Rope Diameter		Lagging			Line Speed and Pull								Drum Capacity			
		Root Diameter		Type	First Layer Rope				Full Drum Rope				First Layer		Full Drum	
					Line Speed		Line Pull		Line Speed		Line Pull					
Inches	Milli-meters	Inches	Meters		F.P.M.	M/Min.	Lbs.	Kgs.	F.P.M.	M/Min.	Lbs.	Kgs.	Feet	Meters	Feet	Meters
⅝	15.88	9	.23	Grooved	123	37.49	27,100	12,293	267	81.38	12,500	5,670	22	6.71	342	104.24

Third Drum

Wire Rope Diameter		Lagging			Line Speed and Pull								Drum Capacity			
		Root Diameter		Type	First Layer Rope				Full Drum Rope				First Layer		Full Drum	
					Line Speed		Line Pull		Line Speed		Line Pull					
Inches	Milli-meters	Inches	Meters		F.P.M.	M/Min.	Lbs.	Kgs.	F.P.M.	M/Min.	Lbs.	Kgs.	Feet	Meters	Feet	Meters
⅝	15.88	9	.23	Grooved	123	37.49	10,000	4,536	202	61.57	6,000	2,722	35	10.67	297	90.53

Crane Boom And Auxiliary Equipment

Angle Boom — Two piece; basic 40′ (12.19 m) length, all-welded box lattice design with 20′ (6.10 m) upper and lower sections. Boom 34″ (.86 m) deep and 34″ (.86 m) wide at the connections. Lower section constructed with 3″ (76.2 mm) x 3″ (76.2 mm) x ⅜″ (9.53 mm) alloy steel main chord angles. Upper section constructed with 3″ (76.2 mm) x 3″ (76.2 mm) x 5/16″ (7.94 mm) alloy steel main chord angles.

Boomfoot — 1⅝″ (41.28 mm) thick with 38″ (.97 m) centers.

Boomfoot Pin — Steel, heat treated.

Peak Shaft — Steel, heat treated.

Peak Sheaves — Cast steel, mounted on anti-friction bearings. For lift crane, 2 sheaves are standard and 3 sheaves optional. For dragline, 2 sheaves are standard and 1 wide-flared sheave is optional. For clamshell, 2 sheaves are standard.

Boom Connections — Pin connections standard; permit quick removal or addition of boom extensions. Bolted connections optional.

Boom Extensions — Available in 5′ (1.52 m), 10′ (3.05 m), 15′ (4.57 m) and 20′ (6.10 m) lengths.

Boom Stops — Dual, rigid type with spring-loaded bumpers.

Boomhoist Bridle — Serves as a connection between pendant ropes and boomhoist wire rope reeving.

Low Gantry Sheaves — Ductile iron; 3 sheaves in bail and one on gantry head shaft for 8-part line.

High Gantry Sheaves — Ductile iron; three, four, or five sheaves in bail and two sheaves on gantry head shaft for eight, ten, or twelve part line.

Load Hoist Rope Deflector Rollers — To deflect main hoist line over top of boom. Required when third drum rope passes over crane boom. Rollers mounted on anti-friction bearings. The following

number of rollers recommended for specific boom lengths: For booms up to 45′ (13.72 m) long, one required; for booms 50′ (15.24 m) to 60′ (18.29 m) long, two required.

Boom Angle Indicator — Mounted on boom near base.

Boompoint Head Sheave Guards — Standard; formed, rigid, round steel. Optional — roller-type guards. Note: Roller guards do not permit use of center head sheave.

Auxiliary Equipment for Boom

Fairlead — Full-revolving type with barrel, sheaves and guide rollers mounted on anti-friction bearings.

Tagline Winders — Rud-O-Matic model 648; spring wound drum type mounted on crane boom. Rope pull off drum — 60′ (18.29 m) to 75′ (22.86 m) from neutral. Morin Tagmaster model BR — 0′ to 100′ (30.48 m); adjustable.

Backfill Board — 9′ (2.74 m) wide; for use in backfilling material into trench.

Hoe Attachment

Boom — All-welded box section. 20′ (6.10 m) boom length is measured from center of boomfoot pins to center of boom peak shaft.

Boomfoot Idler Roller and Pin — Steel boomfoot roller pin, heat treated, bolted in fixed position to boomfoot adaptor. Boom oscillates on heat treated bronze bushings in boomfoot.

Inhaul Rope Sheave on Boom — Ductile iron, heat treated; mounted on bronze bushings. Sheave supports inhaul rope as it passes from front drum to bucket bail.

Boompeak Shaft For Arm — Steel, secured from turning by bolt through hub. Arm oscillates on heat treated bronze bushings.

Deflector Rollers on Boom — Two grooved ductile iron rollers, one on each side of boom; turn on steel roller pin.

Arm — All-welded box section design.

Arm Machinery — Hoist sheave, heat treated; mounted on bronze bushing which turns on steel shaft.

Bridle — Welded plate construction, mounted on bronze bushings; connected to arm with steel pin.

Pitch Brace — Double channel, reinforced welded construction; secured to bucket with steel pins. Arm and pitch brace connections on bucket have case hardened steel bushings.

Bucket — Esco, 1¼ cu. yd. (.96 cu. m), 39″ (.99 m) outside lip width, with Esco tooth-type side cutters for 47″ (1.19 m) cutting width.

Bucket Bail — Horizontal sheave type. Connected to bucket on each side with four steel, heat treated links, and two steel pins.

Sheave — Ductile-iron, heat treated; mounted on bronze bushing which turns on steel shaft.

Mast — 9′ (2.74 m) long; pinned to boomfoot adaptor.

Mast Stops — Standard; dual telescoping type.

Mast Machinery — 3 part hoist.

Head Shaft — Steel, heat treated.

Head Shaft Sheave — Ductile-iron, heat treated, mounted on sintered iron bushing.

Deflector Sheave — Cast-iron.

Bail Sheave — Ductile-iron, heat-treated; mounted on sintered iron bushing.

Mast Sheaves For 4-Part Boomhoist — Two sheaves, ductile-iron, heat treated; mounted on bronze bushings.

Optional Hoe Attachment With Hydraulic Digging Bucket — Includes special 23″ (.58 m) x 6″ (.15 m) clutch assembly utilized as auxiliary rear drum brake, complete hydraulic system, and bucket actuating cylinder, and attachment handling lugs mounted on both boom and arm. Note: Available only on machine equipped with GM6-71N or Caterpillar 3306T engines with friction clutch.

Hydraulic Pump — Gear-type pump coupled to engine disconnect clutch output shaft by flexible coupling. Pump capacity, 51.2 g.p.m. (194 liters per minute) @ 2,000 p.s.i. (141 kg/cm²).

Bucket — Esco, 1¼ cu. yd. (.96 cu. m), 39″ (.99 m) outside lip width, with Esco tooth type side cutters for 47″ (1.19 m) cutting width.

Bucket Cylinder — One hydraulic cylinder; 6½″ (.17 m) dia. bore, 4″ (.10 m) dia. rod, 42½″ (1.08 m) stroke. Cycle time — extended 7.96 seconds; retract 5.19 seconds. The double-acting cylinder is protected from shock loadings at full extend or retract by internal hydraulic cushioning at each end. Cylinder also equipped with polyurethane shock absorber at rod end, and each end of cylinder is mounted on self-aligning steel bushings.

Bucket Cylinder Control Valve — Hydraulic spool valve actuated by solenoid valve which is actuated by toggle switch mounted on top of swing control lever.

Sump Tank — All-welded unit; baffled for strength, improved deaeration, and heat rejection. Mounted on right-hand rear side of extended cab. Capacity, 50 gallons (189 liters), equipped with suction line and return line filters to assure clean oil.

Wire Rope

Application — Type and Size Used

Boomhoist — For crane, dragline, clamshell — Type "N", ⅝″ (15.88 mm) dia.

Boomhoist — For logging boom — Type "A", ¾″ (19.05 mm) dia.

Main Load Hoist — Type "A", ⅝″ (15.88 mm) dia.

Dragline Hoist — Type "N", ¾″ (19.05 mm) dia.

Dragline Inhaul — Type "D", ⅞″ (22.23 mm) dia.

Clamshell Holding and Closing — Type "N", ¾″ (19.05 mm) dia.

Tagline — Type "A", 5/16″ (7.94 mm) dia.

Boom Pendants — Type "N", 1⅛″ (28.58 mm) dia.

Hoe Hoist — Type "A", ¾″ (19.05 mm) dia.

Hoe Inhaul — Type "D", ⅞″ (22.23 mm) dia.

Hoe Mast Hoist — Type "A", ⅝″ (15.88 mm) dia.

Wire Rope Types

Type "A" — 6 x 25 (6 x 19 class), filler wire, improved plow steel, preformed, fiber center, right lay, regular lay.

Type "D" — 6 x 25 (6 x 19 class), filler wire, improved plow steel, preformed, independent wire rope center, right lay, lang lay.

Type "N" — 6 x 25 (6 x 19 class), filler wire, extra improved plow steel, preformed, independent wire rope center, right lay, regular lay.

Main Load Hoist Wire Rope Lengths

Parts of Line	Boom Length					
	40′ (12.19 m)		50′ (15.24 m)		60′ (18.29 m)	
	Feet	Meters	Feet	Meters	Feet	Meters
1	95	28.96	115	35.05	135	41.15
2	140	42.67	170	51.82	200	60.96
3	185	56.39	225	68.58	265	80.77
4	230	70.10	280	85.34	330	100.58
5	275	83.82	335	102.11	395	120.40
6	320	97.54	390	118.87	460	140.21

Boom Hoist Wire Rope Lengths

Gantry	Parts of Line	Rope Length	
		Feet	Meters
Low	8	240	73.15
High	8	255	77.72

Dragline Wire Rope Lengths

	Parts of Line	Boom Length									
		40′ (12.19 m)		45′ (13.72 m)		50′ (15.24 m)		55′ (16.76 m)		60′ (18.29 m)	
		Feet	Meters	Feet	Meters	Feet	Meters	Feet	Meters	Feet	Meters
Hoist	1	95	28.96	105	32.00	115	35.05	125	38.10	135	41.15
Inhaul	1	52	15.85	58	17.68	64	19.51	70	21.34	76	23.16

Clamshell Wire Rope Lengths

	Parts of Line	Boom Length									
		40′ (12.19 m)		45′ (13.72 m)		50′ (15.24 m)		55′ (16.76 m)		60′ (18.29 m)	
		Feet	Meters	Feet	Meters	Feet	Meters	Feet	Meters	Feet	Meters
Holding	1	105	32.00	115	35.05	125	38.10	135	41.15	145	44.20
Closing	1	140	42.67	150	45.72	160	48.77	170	51.82	180	54.86
Tagline	Furnished with Rud-O-Matic Tagline Winder										

Wire Rope Lengths — Hoe

Application		20′ (6.10 m) Hoe Wire Rope Length	
		Feet	Meters
Boomhoist — low gantry	(4 part line)	92	28.04
Boomhoist — high gantry	(4 part line)	97	29.57
Hoist	(3 part line)	110	33.53
Inhaul	(2 part line)	65	19.81

GENERAL INFORMATION ONLY

We are constantly improving our products and therefore reserve the right to change designs and specifications.

MEMBER PCSA POWER CRANE AND SHOVEL ASSOCIATION

FMC Corporation Crane and Excavator Division Headquarters Cedar Rapids Iowa 52406
Plants in: Cedar Rapids Iowa (2) • Lexington Kentucky • Ontario Canada • Milan Italy • Queretaro Mexico • Nagoya Japan (under license)

Link-Belt® LS-98 Pipeliner
Hoe working ranges and lifting capacities

Refer to **notes** page 2.

Boom — 20′0″ *(6.10 m)* long.

Arm — 8′6″ *(2.59 m)* long.

Mounting — crawler; 9′0″ *(2.74 m)* gauge, 15′7″ *(4.75 m)* overall length.

Counterweights — refer to engine/counterweight chart below.

Hoe engine/counterweight requirements

Counterweight	Wire rope attachment				Hydraulic attachment	
	GM4-71N		Cat. 3306-T		GM6-71 Cat. 3306-T	
	Pounds	*kilograms*	Pounds	*kilograms*	Pounds	*kilograms*
A	6,650	*3 016*	5,750	*2 608*	Not applicable	
AB	Not applicable				10,170	*4 613*

Hoe working ranges

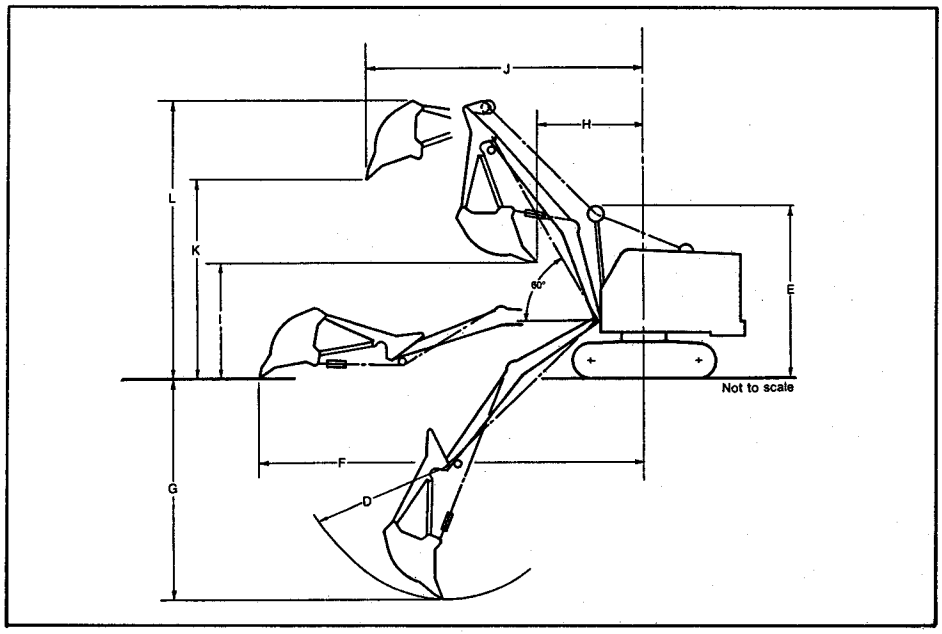

Hoe working ranges		Standard wire rope machine		Machine with hydraulic digging bucket	
		Feet	*meters*	Feet	*meters*
Bucket capacity	—	1¼ cu. yd.	*0.96 cu. m.*	1¼ cu. yd.	*0.96 cu. m.*
Bucket cutting width (standard)	—	47″	*1.19*	47″	*1.19*
Boom length	—	20′ 0″	*6.10*	20′ 0″	*6.10*
Average sweep radius	D	12′ 3″	*3.73*	14′ 0″	*4.27*
Height of hoe mast	E	17′ 4″	*5.28*	16′ 5″	*5.00*
Maximum digging radius	F	35′ 6″	*10.82*	36′ 11″	*11.25*
Maximum digging depth①	G	22′ 3″	*6.78*	24′ 7″	*7.49*
Radius beginning of dump	H	10′ 7″	*3.23*	6′ 9½″	*2.07*
Ground clearance beginning of dump	I	12′ 0″	*3.66*	12′ 9″	*3.89*
Clearance radius end of dump	J	25′ 6″	*7.77*	27′ 7″	*8.41*
Ground clearance end of dump	K	19′ 11″	*6.07*	25′ 2″	*7.67*
Over-all height end of dump	L	26′ 4″	*8.03*	28′ 11″	*8.81*

①Dimension "G" shows maximum digging depth with 55° boom. The digging depth with 45° boom per U.S. Department of Commerce Standards is 20′ 0″ *(6.10 m)* for standard wire rope machine and 22′ 7″ *(6.88 m)* for machine with hydraulic digging bucket. The maximum "effective" digging depth will vary with type of soil and excavation.

GENERAL INFORMATION ONLY

FMC

Hoe lifting capacities over side*

Type of machine	Load radius							
	15′ *(4.57 m)*		16′ *(4.88 m)*		20′ *(6.10 m)*		24′ *(7.32 m)*	
	Pounds	*kilograms*	Pounds	*kilograms*	Pounds	*kilograms*	Pounds	*kilograms*
Wire rope	19,800	*8 981*	18,210	*8 260*	11,850	*5 375*	8,400	*3 810*
Hydraulic bucket	18,820	*8 537*	17,320	*7 816*	10,870	*4 931*	7,420	*3 366*

*Capacities are based on the hoe arm being in a vertical position.

Notes — hoe lifting capacities

1. Lifting capacities shown should not be exceeded. Weight of all lifting accessories must be deducted from the above lifting capacities.
2. Lifting capacities are based on machine standing level on firm, uniform supporting surface. User must make allowances for job conditions such as soft or uneven ground, sudden stopping of loads, or other unfavorable job conditions.
3. Lifting capacities shown do not exceed 75% of tipping loads.
4. Least stable position is over the side.
5. For maximum lifts the front and rear track sprockets must be blocked between shoe and ground.
6. Operator should be fully acquainted with the Operator's Manual furnished by the manufacturer before operating machine.
7. Capacities apply only to machine as originally manufactured and normally equipped by FMC Corporation, Cable Crane and Excavator Division.

GENERAL INFORMATION ONLY

We are constantly improving our products and therefore reserve the right to change designs and specifications.

FMC Corporation Cable Crane and Excavator Division Cedar Rapids Iowa 52406
Link-Belt® cranes & excavators manufactured in: Cedar Rapids Iowa • Lexington & Bowling Green Kentucky • Ontario Canada • Milan Italy • Queretaro Mexico & Nagoya Japan (under license)