Hydraulic Excavator
Technical Data

RH 200

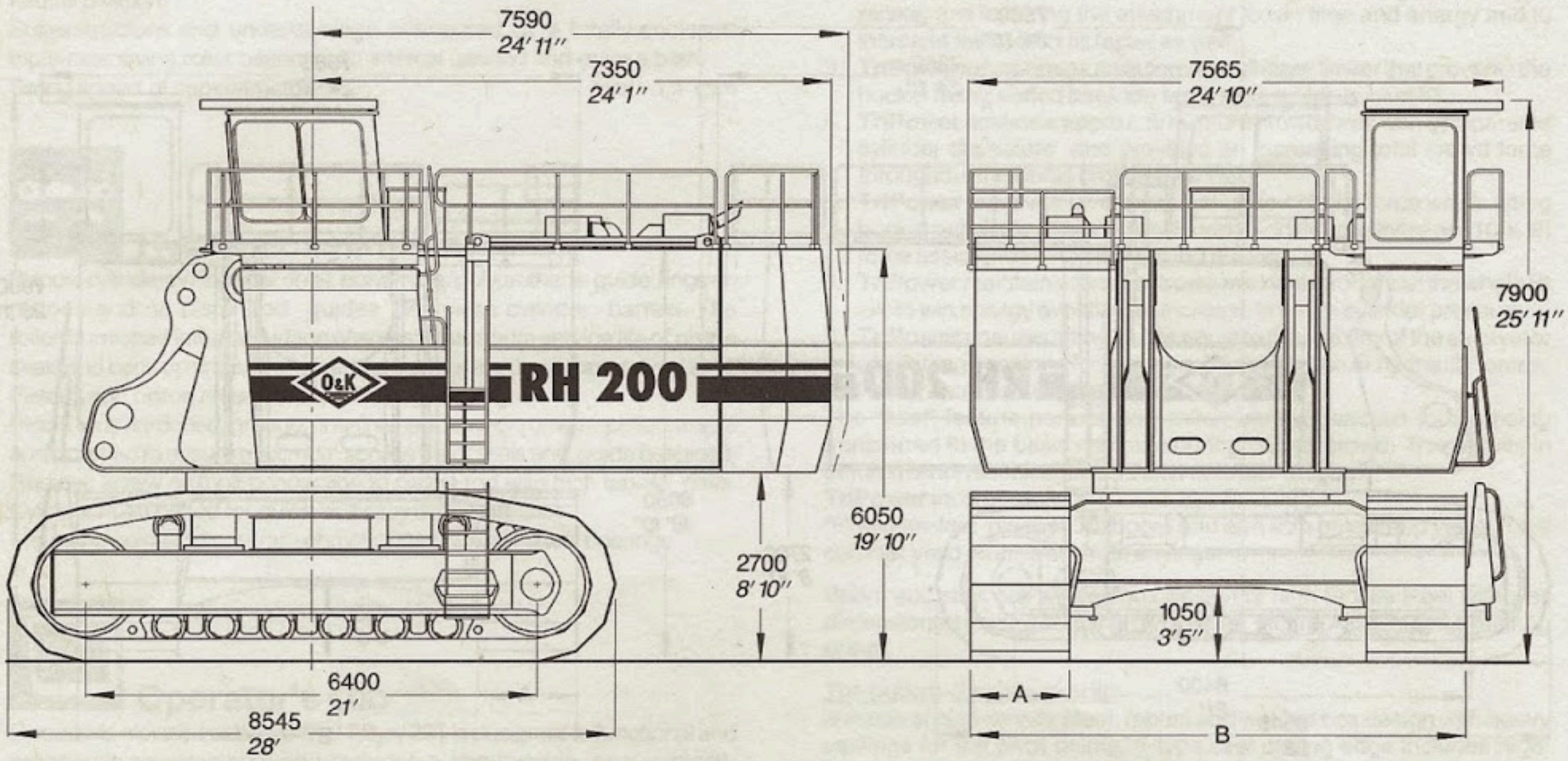

	A	B	kg lbs		kg lbs	
RH 200 - 1400 (standard)	1400 mm *4'7"*	7000 mm *23'*	472 000 *1 040 570*	2.36 kp/cm² *33.6 psi*	473 300 *1 043 440*	2.36 kp/cm² *33.6 psi*
RH 200 - 1600 (on request)	1600 mm *5'3"*	7200 mm *23'7"*	476 400 *1 050 270*	2.08 kp/cm² *29.6 psi*	477 700 *1 053 140*	2.09 kp/cm² *29.7 psi*
RH 200 - 1800 (on request)	1800 mm *5'11"*	7400 mm *24'3"*	480 800 *1 059 970*	1.87 kp/cm² *26.6 psi*	482 100 *1 062 840*	1.87 kp/cm² *26.6 psi*

2 Water cooled Diesel engines

Type	**Cummins KTA 38 C - 1200**
Total output ISO 3046/1 (rated)	1516 kW (2060 PS) 1800 min⁻¹
Leistung SAE J 1349 (rated)	1568 kW (2102 HP) 1800 min⁻¹
Leistung SAE J 1349 (max.)	1790 kW (2400 HP) 2100 min⁻¹
Tank capacity	10250 l *(2710 US gal)*

Heavy duty air-filters, 4 x STRATA 1 with dust extraction.
Two-stage fuel filters and water separator.
Automatic engine revolution reduction.
Tanklift for fuel; Wiggins connection

Lighting System	24 V
8 High-performance batteries in series-parallel connection	680 Ah, 24 V

Hydraulic system with PMS

Two axial-piston pumps, two swash-plate swing pumps, two oil cooling pumps and one servo pump, each powered by one of the two engines. Pump distribution transmission mounted to each engine, transferring the output to the hydraulic pumps.
Main pumps controlled by electronic load limit regulation (PMS Pump Managing System). PMS additionally effecting zero oil flow control and flow on demand for the main pumps, providing the required amount of oil, depending upon the joystick position and the load.
Pressure cut-off for main pumps. High degree of hydraulic efficiency ensured by the combined two systems.

Hydraulic output	1516 kW
Oil flow of main pumps	4 x 925 l/min *(4 x 244 US gal/min)*
Pressure, attachment	Up to 30 MPa (300 bar) = 4350 psi
Pressure, travel	Up to 36 MPa (360 bar) = 5220 psi
Oil flow of slewing pumps	4 x 353 l/min *(4 x 93 US gal/min)*
Pressure, slew	Up to 35 MPa (350 bar) = 4980 psi
Total volume of hydraulic oil	7100 l *(1880 US gal)*

Utilization of full engine output through electronic load limit regulation and automatic double-flow for all cylinders.

Filters:
1) Full-flow high-pressure filters (100 µm) for the main pumps, installed directly behind each pump.
2) 2 High pressure filters (200 µm) for the closed swing circuit.
3) 14 Full-flow filters (10 µm) for the complete return circuit.
4) 2 High-pressure filters (40 µm) for servo circuit.
5) 4 High-pressure filters (40 µm) for the feed pumps of the closed swing circuit.
6) 2 Transmission oil filters (40 µm).

Hydraulic Cooling:
Fully independent from main circuit. Hydraulic cooling by 4 thermostatically controlled fans, diameter 1120 mm *(3'8")*. Volume of cooling pumps, each 500 l/min *(132 US gal/min)*.

RH 200

Electric Drive

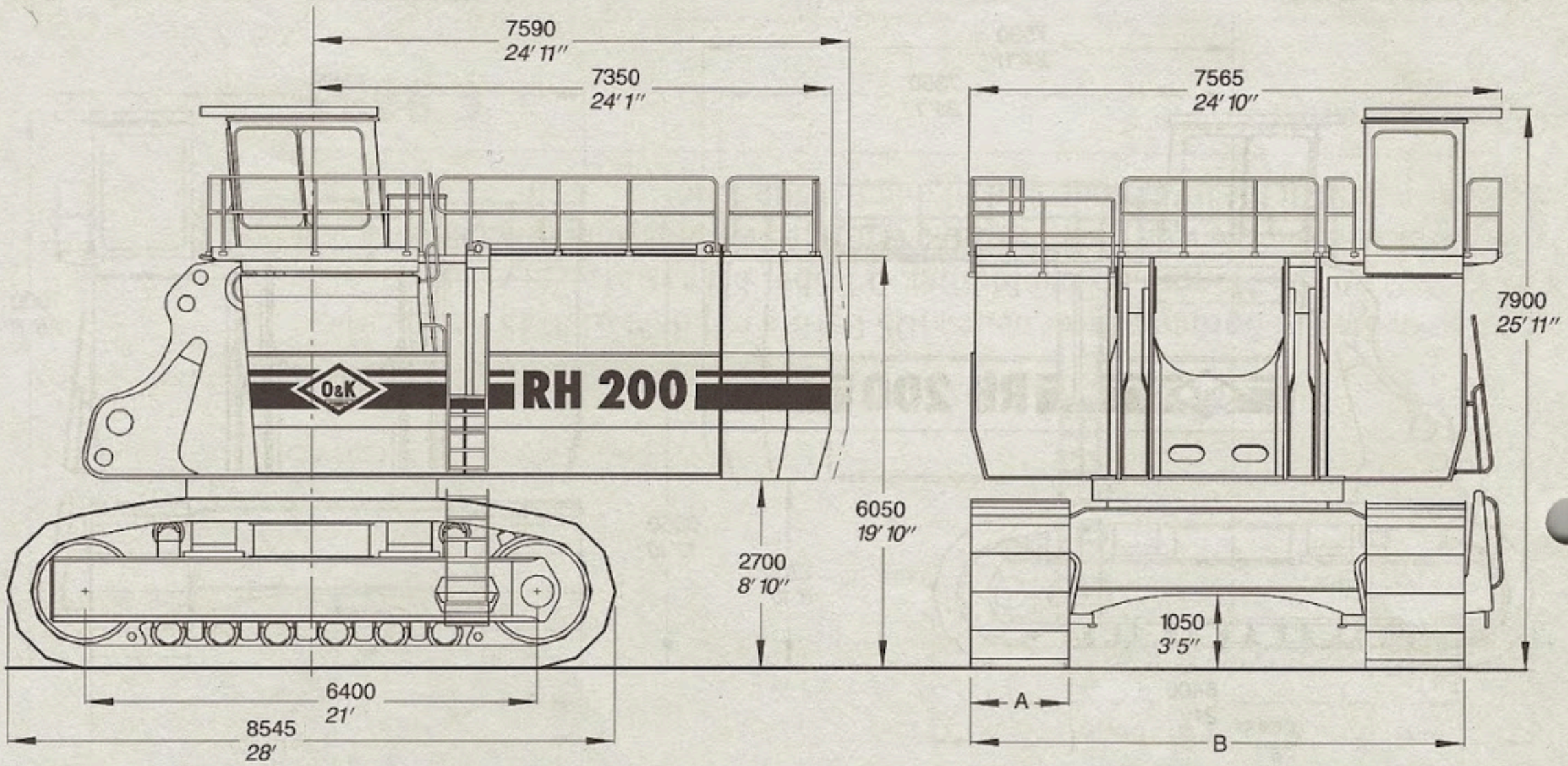

	A	B	kg lbs		kg lbs	
RH 200 - 1400 (standard)	1400 mm *4'7"*	7000 mm *23'*	469 700 *1 035 500*	2.35 kp/cm² *33.4 psi*	471 000 *1 038 370*	2.35 kp/cm² *33.4 psi*
RH 200 - 1600 (on request)	1600 mm *5'3"*	7200 mm *23'7"*	474 100 *1 045 200*	2.07 kp/cm² *29.4 psi*	475 400 *1 048 070*	2.08 kp/cm² *29.6 psi*
RH 200 - 1800 (on request)	1800 mm *5'11"*	7400 mm *24'3"*	478 500 *1 054 900*	1.86 kp/cm² *26.5 psi*	479 800 *1 057 770*	1.86 kp/cm² *26.5 psi*

1 Electric motor

Output (rated)	1600 kW*
Nominal voltage	4 - 6.6 kV +/- 10 %
Frequency	50 Hz* or 60 Hz**
Speed (rated)	1500 rpm* or 1800 rpm**
Starting current I_A	600 %*, 350 %** or 200 %** of I_N

* = standard; ** = on request

Hydraulic system with PMS

Four axial-piston pumps, three swash-plate swing pumps, four oil cooling pumps and two servo pumps powered by one electric motor. Pump distribution transmission mounted to motor, transferring the output to the hydraulic pumps.

Main pumps controlled by electronic load limit regulation (PMS Pump Managing System). PMS additionally effecting zero oil flow control and flow on demand for the main pumps, providing the required amount of oil, depending upon the joystick position and the load. Pressure cut-off for main pumps. High degree of hydraulic efficiency ensured by the combined two systems.

Hydraulic output	1600 kW
Oil flow of main pumps	4 x 925 l/min *(4 x 244 US gal/min)*
Pressure, attachment	Up to 30 MPa (300 bar) = 4350 psi
Pressure, travel	Up to 36 MPa (360 bar) = 5220 psi
Oil flow of slewing pumps	4 x 490 l/min *(4 x 156 US gal/min)*
Pressure, slew	Up to 35 MPa (350 bar) = 4980 psi
Total volume of hydraulic oil	7100 l *(1880 US gal)*

Utilization of full motor output through electronic load limit regulation and automatic double-flow for all cylinders.

Filters:

1) Full-flow high-pressure filters (100 µm) for the main pumps, installed directly behind each pump.
2) 14 Full-flow filters (10 µm) for the complete return circuit.
3) 2 High-pressure filters (40 µm) for servo circuit.
4) 3 High-pressure filters (40 µm) for the feed pumps of the closed swing circuit.
6) 2 Transmission oil filters (40 µm).

Hydraulic Cooling:

Fully independent from main circuits. Hydraulic cooling by 4 thermostatically controlled fans, diameter 1120 mm *(3'8")*. Volume of cooling pumps, each 500 l/min *(132 US gal/min)*.

Swing system

Four swing drives, each with one axial piston motor and one compact planetary transmission with emergency and parking brake. Braking of the swing motion hydraulically by counteracting control. Closed-loop swing circuit with torque control for minimum energy consumption during acceleration, energy recycling during braking. Switch actuated superstructure holding brake. Free swing of superstructure with control lever in neutral position.
Superstructure and undercarriage connected by a totally-enclosed triple-race swing roller bearing with internal gearing and grease bath.
Swing speed of superstructure: max. 3,9 rpm

Hydraulic cylinders

Robust cylinders with wiper rings, polyamide/polyurethane guide rings on pistons and on piston-rod guides. Seamless cylinder barrels. The roller-burnished internal surface ensures a maximum service life of piston seals and back up rings. End-of-stroke cushioning on piston and rod side. Pistons and piston rods of one-piece forged design.
Piston rods hardened, ground, fine-finished, hard-chromium-plated to size and polished to ensure maximum service life of seals and guide bushings. Rod eye screw on/bolt connection to piston rod with high tensile bolts. Cylinder head bolted for quick and easy maintenance.
Mounting points cylinder/attachment fitted with spherical bearings.

Operator's cab

Operator's elevated cab (eye level 7.0 m/23') is designed to functional and ergonomic requirements and includes a comfortable, pneumatically adjustable and cushioned seat with integrated dual-lever joystick controls. FOPS (rock guard; approved acc. to DIN ISO 3449) integrated into cab structure. Blower and heater for cab ventilation. Optimum panoramic view. Tinted safety glass windows with armoured windshield and one sliding side window. Windshield with parallel intermittent wiper/washer. Safety switch in seat cushion to switch off the hydraulic controls.
O&K Board Control System (BCS) - electronic monitoring and data logging system for vital signs and service data of the engines, hydraulic system, pumps, motors and drive system; also integrating the PMS and PLC systems. All vital signs and service data available in analog and digital display or printed from memory storage (printer optional).
PMS - Electronic load limit regulator to hydraulic pumps using BCS input.
PLC - Programmable logic control for automatic lubrication and system dignostics for quick, accurate fault-finding; automatic revolution reduction and engine shutdown (Diesel version only).

Crawler unit

Unique heavy duty crawler unit emphasizing all the advantages of a tractor-type track chain. This "combined pad-link" type crawler unit combines a chain link and a track pad into one unit. The drive forces are transferred from the sprocket cam directly into the "combined pad-link" unit. Proportionate weight transmitted through the sprocket does not strain the pins and bushings connecting the "combined pad-link". The pins are full-floating, in combination with an enhanced matching of materials, which achieves a low level of wear. Wear reduction is achieved by the power flow of the sprocket cam directly to the chain links. Running surfaces and teeth contact areas hardened. This low-maintenance untercarriage incorporates a hydraulically variable track tensioning system, which reduces wear and tear on the chain. The crawler drive unit is built in a compact design, integrated within the protected area of the track frame and pad-link. Two two-stage axial-piston motors power one three-stage planetary drive transmission per crawler unit.
Travel brakes - adjustment free hydraulically operated emergency and parking brakes. Automatic hydraulic retarder and suction valve to prevent overspeed on downhill travel.

Pin diameter:	110 mm *(4³/₈")*
Pitch:	475 mm *(1'7")*
Travel speed:	0-2.3 km/h *(0-1.4 mph)*
Max. tractive force:	2520 kN (257 t = *566 320 lbs*)
Gradability:	approximately 50 %

Shovel attachment

Shovel attachment with **TriPower** system. On O&K's patented **TriPower** attachment, bucket crowd and boom cylinders are connected through a triangular rocker. This equipment geometry ensures following advantages:

1. **TriPower** ensures automatic, constant-angle bucket guidance when crowding horizontally at any height or reach to win time and energy.
2. **TriPower** ensures automatic, constant-angle bucket guidance when raising and lowering the attachment to win time and energy and to increase the bucket fill factor as well.
3. **TriPower** incorporates an automatic roll-back limiter that prevents the bucket being curled back too far to save a high bucket fill.
4. **TriPower** achieves approx. 50% more crowd force with comparable cylinder diameters and provides an increasing total crowd force throughout the whole crowd distance.
5. **TriPower** achieves an increase of up to 40% lift force when lifting bucket out of pile with boom cylinders. Additionally there are 10 % lift force assistance when lifting filled bucket.
6. **TriPower** maintains constant boom moment throughout the whole lift arc to win energy avoiding an increase in boom cylinder pressure.
7. **TriPower** ensures lifting forces equal to the stability of the excavator at all lifting positions for best possible utilization of hydraulic forces.

TriPower incorporates "float"
The "float" feature permits only minor vertical reaction forces being transferred to the basic machine during bucket crowd. This results in better overall machine life and less operator fatigue.
TriPower incorporates "pressure-free lowering"
"Pressure-free lowering" of boom and arm with quick drop valve in the cylinder yield energy and fuel savings.

Boom and stick are welded box design of high-tensile steel with well dimensioned steel castings at pivot areas, incorporating sealed bearing points.

The bottom-dump bucket lip
is made of high-tensile steel, robust and welded box design with heavy castings for the pivot points. V-type cast cutting edge includes high-tensile tooth tips with patented socket type pin-on device and wear-resistant material between tooth tips. Bucket lip is designed and shaped for optimum material penetration and flow, providing the best possible bucket fill factor. Bucket lip includes sealed bearing/bushing pivot points.

The bottom dump bucket backwall
is designed to provide the ideal flow of forces between the various points of digging impact. Direct absorption of forces by the bucket crowd cylinders via integral heavy-cast pivot points, evenly dispersed into the bucket backwall.

Various bottom-dump buckets are available for a wide range of applications.

Backhoe attachment

Monoboom and arm (stick) of high-tensile, close-welded box design with well-dimensioned steel castings at pivot areas.
Sealed bearing/bushing pivot points.
Backhoe of high-tensile steel and welded box design for the bucket back. Wearstrips along bucket bottom. V-type cutting edge with high tensile tooth tips; ESCO W110 system.

Lubrication system

Automatic central lubrication system with time-relay control. Pneumatic dual-circuit system with large diameter pipes (20 mm) and distributors.

Lubrication:
a) Shovel configuration - complete for swing bearing, all pivot points of attachment and cylinders including bucket.
b) Backhoe configuration - complete for swing bearing, all pivot points of attachment and cylinders including bucket.

Grease drum of 200 l *(53 US gal)* capacity.

Optional equipment

- Konvekta air conditioning / heating system
- Auxiliary hydraulic crane on upper deck for repair and maintenance
- Tool locker
- Tanklift with Wiggins connections for service fluids
- Fire extinguisher system
- Catwalks with rails on boom
- ESCO tooth system W130 for shovels
- Starting aid for reduction of starting current to 200 % of I_N

Standard shovel attachment
Boom 8 m, *26'3"*

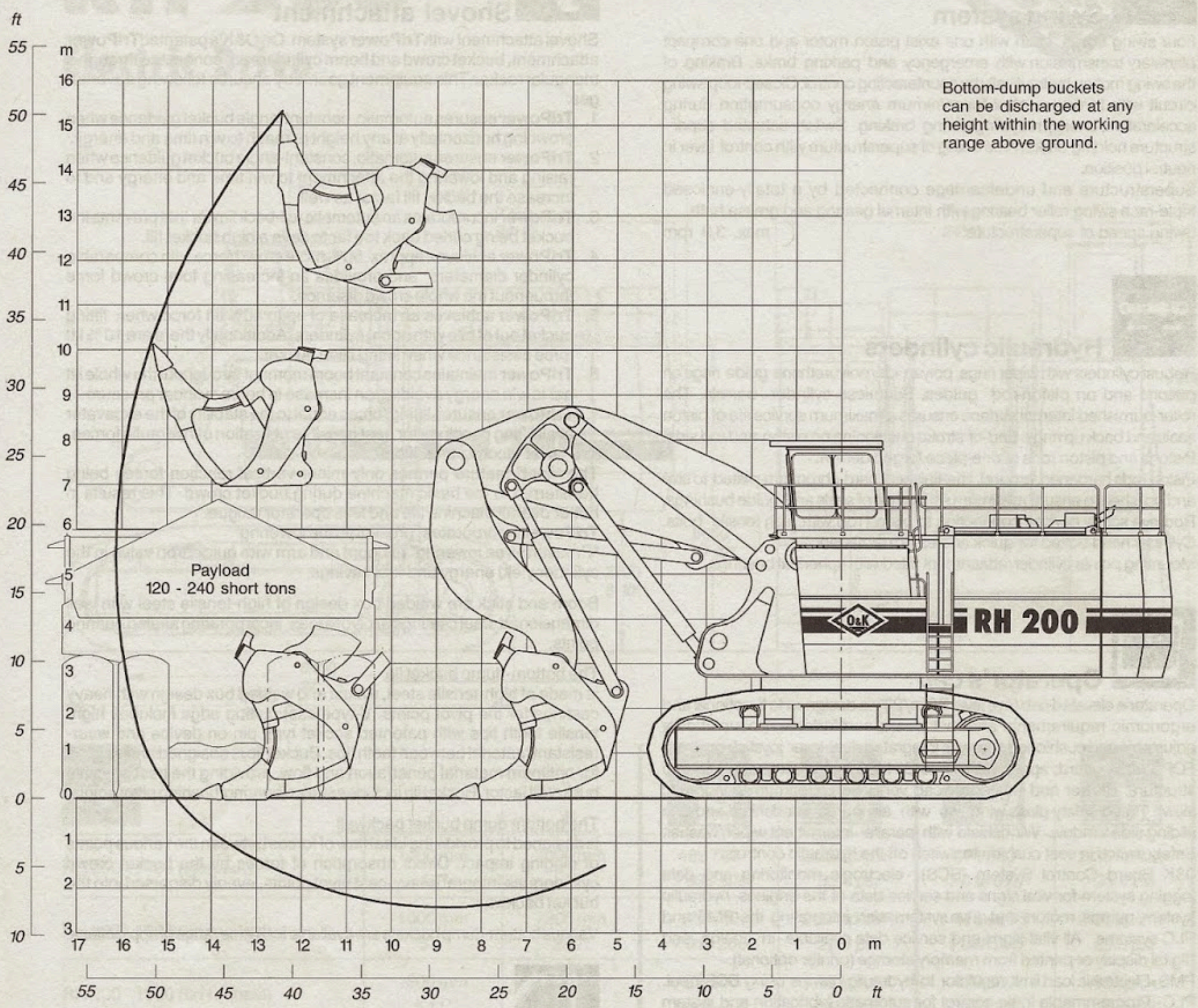

Bottom-dump buckets can be discharged at any height within the working range above ground.

Operating weights of standard Diesel version
RH 200 - 1400 about 472 000 kg / *1 040 570 lbs*
RH 200 - 1600 about 476 400 kg / *1 050 270 lbs*
RH 200 - 1800 about 480 800 kg / *1 059 970 lbs*

Crowd force
1 500 kN
337 100 lbs

Breakout force
1 500 kN
337 100 lbs

			Heavy rock bucket ESCO-stripper-lip		Heavy rock bucket ESCO-stripper-lip		Rock bucket ESCO-stripper-lip		Standard rock bucket O&K teeth system	
SAE/CECE	m³	*cuyd*	17	*22.2*	21	*27.5*	25	*32.7*	26	*34*
	mm	*ft:in*	3650	*12'*	4700	*15'5"*	4700	*15'5"*	4570	*15'*
	mm	*ft:in*	2500	*8'2"*	2500	*8'2"*	2500	*8'2"*	2500	*8'2"*
	No. of teeth		4		6		6		6	
	kg	*lbs*	35500	*78260*	39800	*87740*	40600	*89510*	39400	*86860*
Max. material density (loose)	t/m³	*lbs/cuyd*	2.7	*4550*	2.2	*3710*	1.8	*3030*	1.8	*3030*
Standard hardfacing			stage 2		stage 2		stage 1		stage 1	

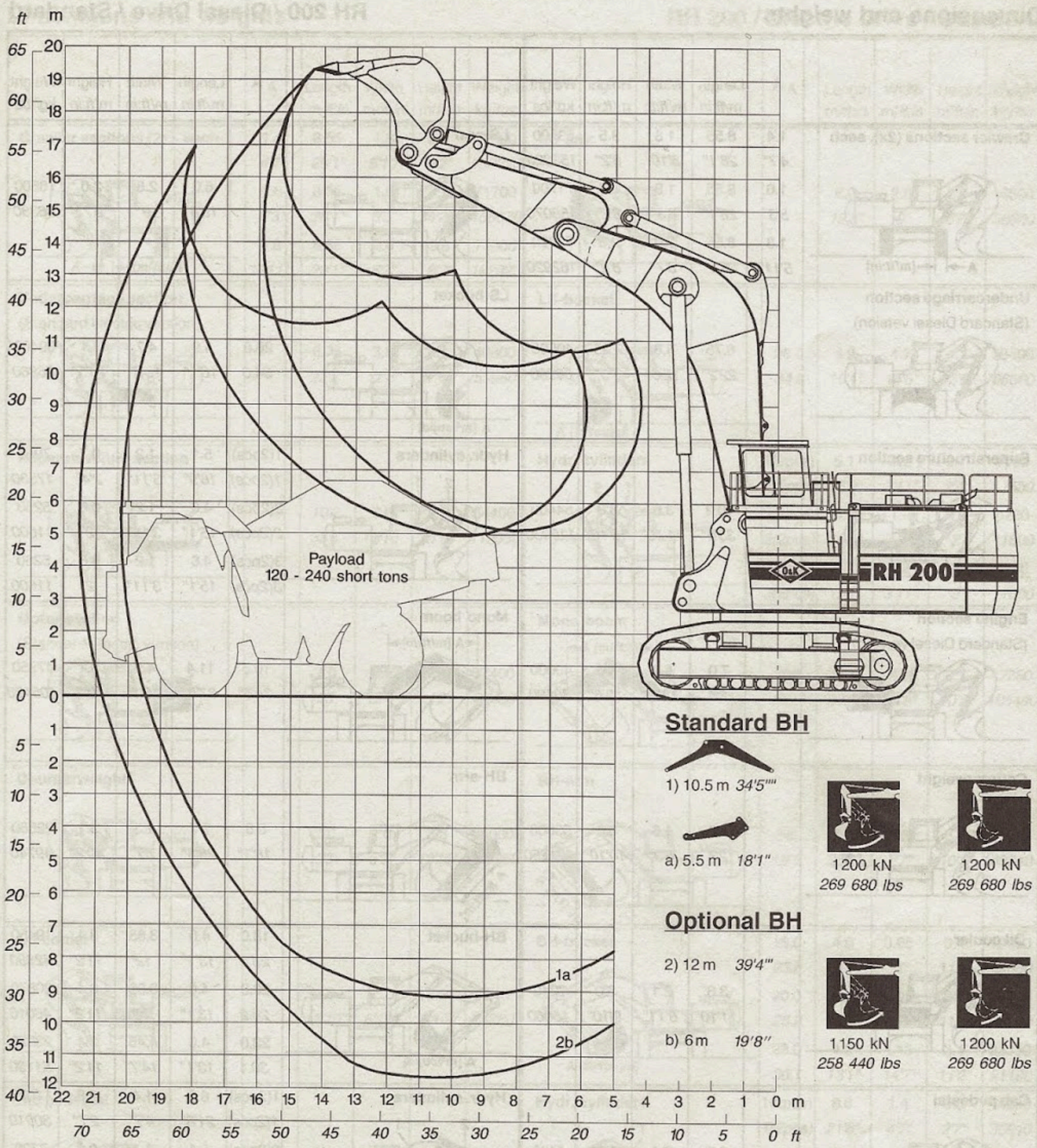

Operating weights of standard Diesel version
RH 200 - 1400, about 473 300 kg / *1 043 440 lbs*
RH 200 - 1600, about 477 700 kg / *1 053 140 lbs*
RH 200 - 1800, about 482 100 kg / *1 062 840 lbs*

Stability acc. to German standard DIN 24087
Loose densities in t/m³ / *lbs/cuyd* at 100 % bucket filling, applying to max. reach in 360° swing range.

			Rock bucket		Rock bucket		Rock bucket	
SAE*	**m³**	***cuyd***	**18.0**	***23.5***	**20.0**	***26.2***	**23.0**	***30.1***
CECE**	m³	*cuyd*	16.5	*21.6*	18.3	*23.9*	21.1	*27.6*
struck	m³	*cuyd*	13.5	*17.7*	15.0	*19.6*	17.3	*22.6*
	mm	*ft:in*	3570	*11'9"*	3880	*12'9"*	4390	*14'5"*
	No. of teeth		6		6		6	
	kg***	*lbs****	19450	*42880*	20870	*46010*	23220	*51190*
			Suitable for material density (loose) of: *(t/m³ lbs/cuyd)*					
10.5 m *34'5"*	5.5 m	*18'1"*	2.5	*4210*	2.2	*3710*	1.8	*3030*
12.0 m *39'4"*	6.0 m	*19'8"*	1.8	*3030*	-		-	

*BH bucket, heaped 1:1 **BH bucket, heaped 1:2 ***without hardfacing

	A	Length m/ft:in	Width m/ft:in	Height m/ft:in	Weight kg/lbs
Crawler sections (2x), each	1.4	8.55	1.8	2.5	69500
	4'7"	*28'1"*	*5'10'*	*8'2"*	*153220*
	1.6	8.55	1.9	2.5	71700
	5'3"	*28'1"*	*6'3"*	*8'2"*	*158070*
	1.8	8.55	2.0	2.5	73900
	5'11"	*28'1"*	*6'7"*	*8'2"*	*162920*
Undercarriage section (Standard Diesel version)		6.75	3.8	2.25	40500
		22'2"	*12'6"*	*7'5"*	*89290*
Superstructure section		10.2	3.6	3.3	54400
		33'6"	*11'10"*	*10'10"*	*119930*
Engine section (Standard Diesel version)		7.0	4.4	3.8	40000
		23'	*15'5"*	*12'6"*	*88180*
Counterweight		7.0	1.6	3.3	55000
		23'	*5'3"*	*10'10"*	*121250*
Oil cooler		3.6	2.1	3.0	7240
		11'10"	*6'11"*	*9'10"*	*15960*
Cab pedestal		3.7	2.1	3.85	4400
		12'2"	*6'11"*	*12'8"*	*9700*
Cab and rock guard		2.9	2.1	2.6	900
		9'6"	*6'11"*	*8'6"*	*1980*
Boom	8.0	8.9	3.1	3.5	45000
	26'3"	*29'2"*	*10'2"*	*11'6"*	*99210*

	A	Length m/ft:in	Width m/ft:in	Height m/ft:in	Weight kg/lbs
LS-arm		6.0	2.8	2.0	16500
		19'8"	*9'*	*6'7"*	*36380*
LS-bucket	26.0	4.9	4.7	4.1	39400
	34.0	*16'1"*	*15'5"*	*13'5"*	*86860*
Hydr. cylinders	1(2pcs)	5.1	1.2	0.7	7950
	1(2pcs)	*16'9"*	*3'11"*	*2'4"*	*17530*
	2(2pcs)	4.6	1.2	0.6	5260
	2(2pcs)	*15'1"*	*3'11"*	*2'*	*11600*
	3(2pcs)	4.6	1.2	0.6	5260
	3(2pcs)	*15'1"*	*3'11"*	*2'*	*11600*
Mono boom	10.5	11.4	4.9	3.1	47850
	34'5"	*37'5"*	*16'1"*	*10'2"*	*105490*
BH-arm	5.5	7.7	2.3	3.1	22560
	18'1"	*25'3"*	*7'7"*	*10'2"*	*49740*
BH-bucket	18.0	4.0	3.65	3.4	19450
	23.5	*13'1"*	*12'*	*11'2"*	*42880*
	20.0	4.0	3.95	3.4	20870
	26.2	*13'1"*	*13'*	*11'2"*	*46010*
	23.0	4.0	4.45	3.4	23220
	30.1	*13'1"*	*14'7"*	*11'2"*	*51190*
Hydr. cylinders	1(2pcs)	6.6	1.4	0.8	14020
	1(2pcs)	*21'8"*	*4'7"*	*2'7"*	*30910*
	2(2pcs)	5.1	1.4	0.8	7720
	2(2pcs)	*16'9"*	*4'7"*	*2'7"*	*17020*
	3(2pcs)	4.6	1.2	0.6	5260
	3(2pcs)	*15'1"*	*3'11"*	*2'*	*11600*
Box for accessories		1.35	1.35	2.0	4980
		4'5"	*4'5"*	*6'7"*	*10980*
		3.9	1.9	1.6	2400
		12'10"	*6'3"*	*5'3"*	*5290*
		4.3	1.9	1.7	2020
		14'1"	*6'3"*	*5'7"*	*4450*
		3.3	1.6	1.8	2140
		10'10"	*5'3"*	*5'11"*	*4720*

	A	Length m/*ft:in*	Width m/*ft:in*	Height m/*ft:in*	Weight kg/*lbs*
Crawler sections (2x), each	1.4	8.55	1.8	2.5	69500
	4'7"	*28'1"*	*5'10'*	*8'2"*	*153220*
	1.6	8.55	1.9	2.5	71700
	5'3"	*28'1"*	*6'3"*	*8'2"*	*158070*
	1.8	8.55	2.0	2.5	73900
	5'11"	*28'1"*	*6'7"*	*8'2"*	*162920*
Undercarriage section (Standard electric version)		6.75	3.8	2.25	40800
		22'2"	*12'6"*	*7'5"*	*89950*
Superstructure section		10.2	3.6	3.3	54400
		33'6"	*11'10"*	*10'10"*	*119930*
Motor section (Standard electric version)		7.0	3.8	3.65	37400
		23'	*12'6"*	*12'*	*82450*
Counterweight		7.0	1.6	3.3	55000
		23'	*5'3"*	*10'10"*	*121250*
Oil cooler		3.6	2.1	3.0	7240
		11'10"	*6'11"*	*9'10"*	*15960*
Cab pedestal		3.7	2.1	3.85	4400
		12'2"	*6'11"*	*12'8"*	*9700*
Cab and rock guard		2.9	2.1	2.6	900
		9'6"	*6'11"*	*8'6"*	*1980*
Boom	8.0	8.9	3.1	3.5	45000
	26'3"	*29'2"*	*10'2"*	*11'6"*	*99210*

	A	Length m/*ft:in*	Width m/*ft:in*	Height m/*ft:in*	Weight kg/*lbs*
LS-arm		6.0	2.8	2.0	16500
		19'8"	*9'*	*6'7"*	*36380*
LS-bucket	26.0	4.9	4.7	4.1	39400
	34.0	*16'1"*	*15'5"*	*13'5"*	*86860*
Hydr. cylinders	1(2pcs)	5.1	1.2	0.7	7950
	1(2pcs)	*16'9"*	*3'11"*	*2'4"*	*17530*
	2(2pcs)	4.6	1.2	0.6	5260
	2(2pcs)	*15'1"*	*3'11"*	*2'*	*11600*
	3(2pcs)	4.6	1.2	0.6	5260
	3(2pcs)	*15'1"*	*3'11"*	*2'*	*11600*
Mono boom	10.5	11.4	4.9	3.1	47850
	34'5"	*37'5"*	*14'9"*	*10'2"*	*105490*
BH-arm	5.5	7.7	2.3	3.1	22560
	18'1"	*25'3"*	*7'7"*	*10'2"*	*49740*
BH-bucket	18.0	4.0	3.65	3.4	19450
	23.5	*13'1"*	*12'*	*11'2"*	*42880*
	20.0	4.0	3.95	3.4	20870
	26.2	*13'1"*	*13'*	*11'2"*	*46010*
	23.0	4.0	4.45	3.4	23220
	30.1	*13'1"*	*14'7"*	*11'2"*	*51190*
Hydr. cylinders	1(2pcs)	6.6	1.4	0.8	14020
	1(2pcs)	*21'8"*	*4'7"*	*2'7"*	*30910*
	2(2pcs)	5.1	1.4	0.8	7720
	2(2pcs)	*16'9"*	*4'7"*	*2'7"*	*17020*
	3(2pcs)	4.6	1.2	0.6	5260
	3(2pcs)	*15'1"*	*3'11"*	*2'*	*11600*
Box for accessories		1.35	1.35	2.0	4980
		4'5"	*4'5"*	*6'7"*	*10980*
		3.9	1.9	1.6	2400
		12'10"	*6'3"*	*5'3"*	*5290*
		4.3	1.9	1.7	2020
		14'1"	*6'3"*	*5'7"*	*4450*
		3.3	1.6	1.8	2140
		10'10"	*5'3"*	*5'11"*	*4720*

Alterations without prior notice. The illustrations do not necessarily show the standard version of the machine.

O&K Trade Mark

O&K Mining GmbH

Postfach 17 01 06
D-44060 Dortmund
Tel. (231) 17 60-0
Fax (231) 17 60-819
Telex 822 222

Your partner:

B 267.1 e 1-394

Printed on environment-friendly paper 100% recycled

Hydraulikbagger RH 200

Maßgeschneidert...

... für 170 bis 240 sht. Muldenkipper. Der RH 200 kann in 4 bis 6 Spielen diese Muldenkipper beladen. Damit können Muldenkipperflotten dieser Größenklassen höchst wirtschaftlich betrieben werden.
Der RH 200 ist ein Großhydraulikbagger für das Laden von gesprengtem Haufwerk, aber auch für das Lösen und Laden von ungesprengten Böden in Großtagebauen.
Hohe Ladeleistung, große Mobilität und optimale Verfügbarkeit realisiert dieser Bagger mit modernster und verläßlicher Technik.

Zwei Großserien-Motoren, wie sie auch in Muldenkippern eingebaut werden, geben dem RH 200 seine große Kraft von insgesamt 1516 kW /2060 PS (nach DIN 6271).
Gute Zugänglichkeit der Motoren bei durchdachtem Oberwagenaufbau gewährleistet eine schnelle Wartung und kurze Stillstandszeiten.
Übrigens: Auch mit einem Motor ist der RH 200 betriebsfähig.
Das Hydrauliksystem mit vier Hauptpumpen, vier Schwenkpumpen, vier Kühlpumpen und zwei Servopumpen wird durch das **Pumpen Managing System** elektronisch gesteuert. Damit wird die enorme Motorleistung praktisch vollständig in hydraulische Leistung umgesetzt.
Dieses System umfaßt eine:
○ Grenzlastregelung
○ automatische Drehzahlabsenkung des Dieselmotors zur Reduzierung des Energieverbrauchs und Geräuschpegels
○ automatische Nullhubregelung der Hauptpumpen zur Senkung des Energieverbrauchs
○ Mengenbedarfssteuerung zur optimalen Baggerfeinsteuerung und zur Vermeidung von Energieverlusten
○ Power Control mit individueller Baggereinstellung auf unterschiedliche Einsatzanforderungen zur weiter optimierten Wirtschaftlichkeit.

TriPower
ist immer noch die einzigartige Kinematik mit Vorteilen, die schon von den übrigen O&K Großhydraulikbaggern bekannt sind.

Das einzigartige Laufwerk
ist mit einem zweistufigen Planetenradnabengetriebe und je zwei Fahrmotoren ausgerüstet, die zum optimalen Schutz vor Beschädigungen nahezu vollständig im Schutzbereich der Bodenplatten angeordnet sind. Das Laufwerk ist als echtes Raupenfahrwerk mit integrierten Kettenglied-Bodenplatteneinheiten ausgeführt, bei dem die Kettenbolzen nicht durch Gewichtskräfte belastet werden.

Das Bord Control System
als automatische Funktionsüberwachung steigert die Geräteverfügbarkeit durch elektronische Fehlerdiagnose und Fehlerfrüherkennung.
Alle wichtigen Betriebsdaten werden auf einem Bildschirm analog und digital angezeigt.
Bei Störungen sind Störungsquellen und Hinweise zu deren Beseitigung auf dem Bildschirm vom Fahrer abzulesen. Zur Fehlerfrüherkennung werden entsprechende Informationen dem Servicepersonal angezeigt.
Eine wesentliche Weiterentwicklung der BCS-Elektronik ist die Erweiterung um das BUS-System.
Dieses System berücksichtigt neben dem BCS noch Informationen aus weiteren O&K Elektronik-Systemen, wie z. B. PMS (Pumpen Managing System) und CAL (Computer Aided Loading System).
Über eine Ringleitung sind die Sensormeldungen der einzelnen Systeme für alle anderen Systeme verfügbar. Grenzwerte und Grenzwertüberschreitungen aus allen Systemen werden von einem Zentralrechner verarbeitet und gespeichert.
Damit ist die Elektronik im RH 200 so optimiert worden, daß sie noch zuverlässiger ist und zu einer weiteren Steigerung der Geräteverfügbarkeit beiträgt.

O&K Mining-Geräte

O&K setzt alles in Bewegung

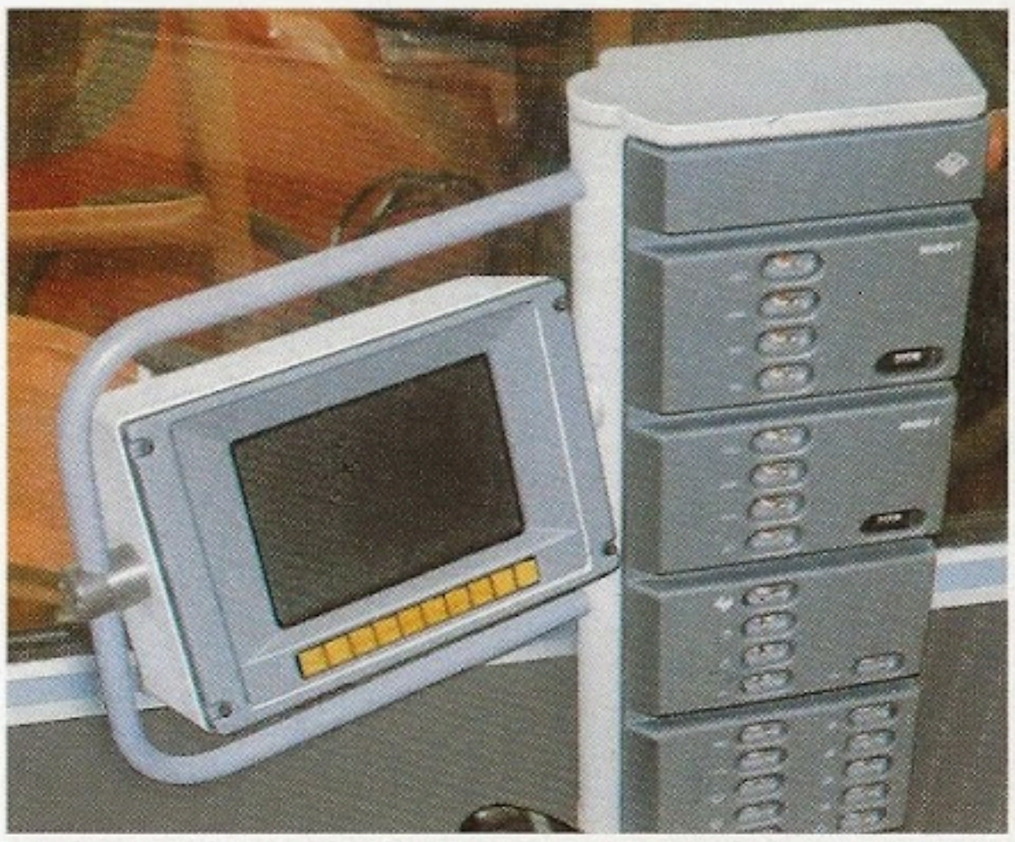

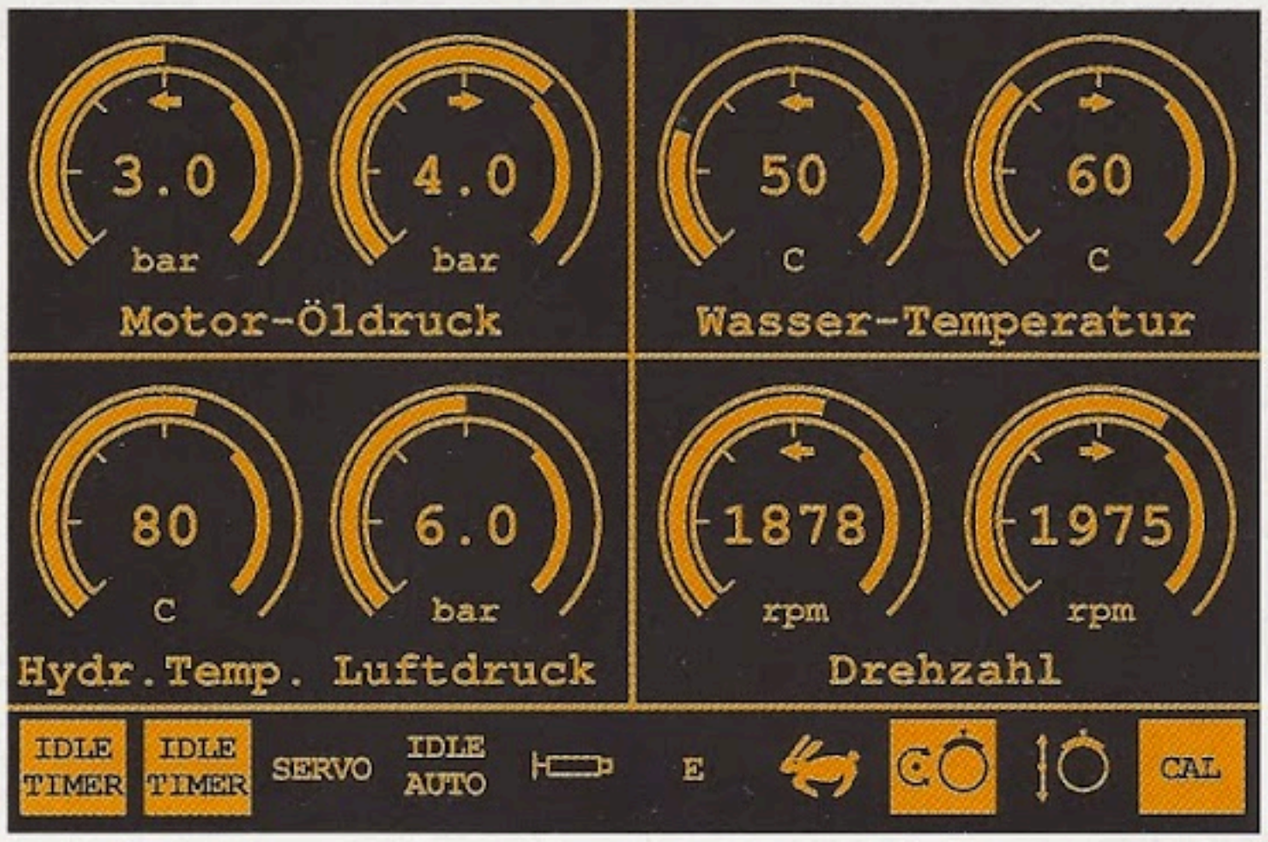

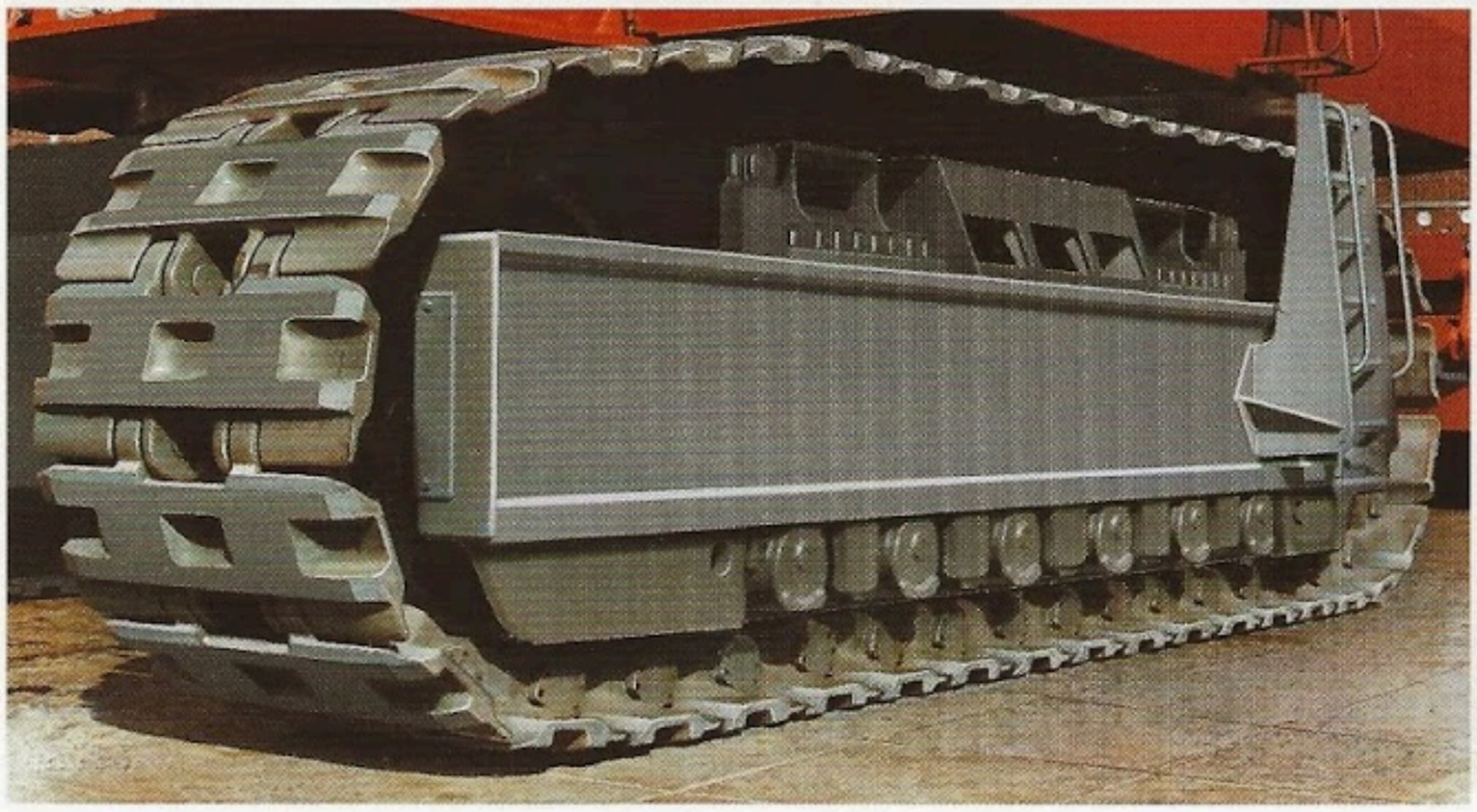

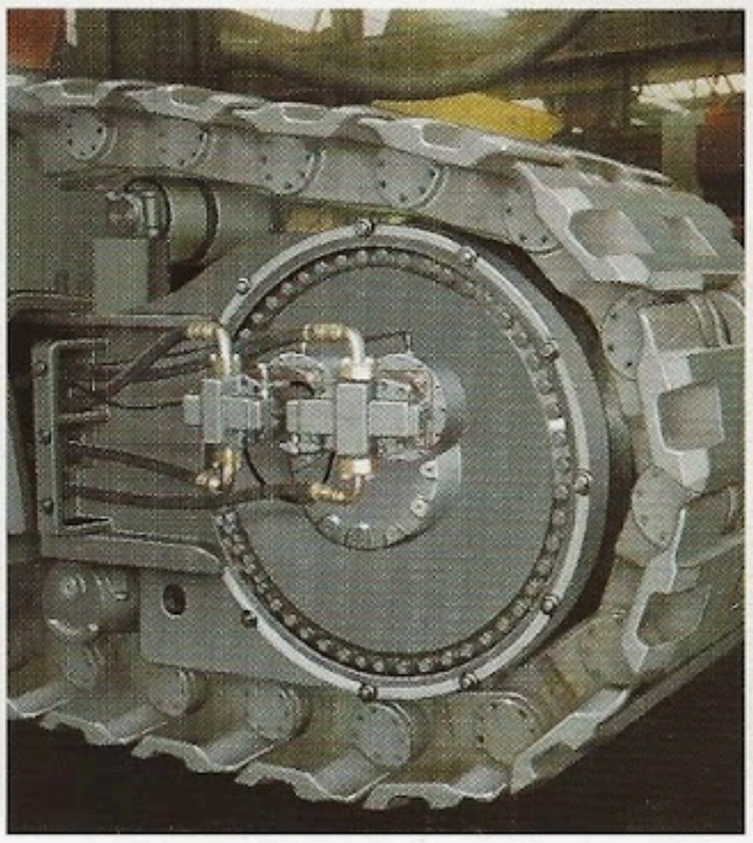

B 204.0 d 4 3.89 SPIELHOFF ● DESIGN Louisgang

Großhydraulikbagger
Große Radlader
Starrahmenmuldenkipper
Knickgelenkte Muldenkipper
Schwere Grader

O&K Mining-Geräte
Vertrieb und Service:
O&K Handel GmbH
Karl-Funke-Str. 30
Postfach 17 02 18
D-4600 Dortmund 1

Deutschland
O&K Vertriebs- und Service-Stützpunkte der O&K Handel GmbH
Andernach 0 26 32-20 08-0
Berlin (West) 0 30-3 32 40 44
Bruchsal 0 72 51-1 70 01/02
Dortmund 02 31-84 96-0
Eutin 0 45 21-40 39
Frankfurt 069-40 10 09-0
Fürth 09 11-7 60 28
Teningen 0 76 41-5 30 38/39
Hamburg 0 40-73 16 21/24
Kassel 05 61-52 20 63
Kissing bei Augsburg 0 82 33-22-498
Köln 02 21-4 98 79-0
Laatzen bei Hannover 05 11-82 20 44/46
München 0 89-81 03-0
Osburg-Neuhaus bei Trier 0 65 00-628+629
Remshalden bei Stuttgart 0 71 51-70 03-0
Rheine 0 59 71-7 02 79
Saarlouis 0 68 31-13 01
Sulzbach-Rosenberg 0 96 61-40 05/6/7
Weyhe bei Bremen 0 42 03-10 24
Vertragshändler
Bregler & Klöckler
Bad Waldsee 0 75 24-20 51
O&K Ersatzteildienst Bochum 02 34-6 13-1

Belgien
O&K Orenstein & Koppel N.V., Leuven 16-25 07 51
Dänemark
Olaf Poulsen A/S, Ishøj 2-99 35 00
Luxemburg
Ets. René Stoll S.A.R.L., Leudelange 2-37 84 84
Niederlande
O&K Orenstein & Koppel N.V., Amsterdam 20-5 68 92 22
Österreich
O&K Orenstein & Koppel Ges. mbH.
Wien 02 22-67 25 08
Haid O.Ö. 0 72 29-8 82 94/5
Eugendorf 0 62 12-83 35-0
Kematen 0 52 32-21 29
Gratkorn 0 31 24-2 23 42
Schweiz
MBA, 8600 Dübendorf 01-8 20 00 21