Euclid R85B

MAXIMUM GMW
147 400 KG (325,000 LBS)

HAULER CLASS
83,5 TONNES
(92.1 TONS)

WET DISC BRAKE

TWO MAN INTEGRAL
ROPS/FOPS CAB

COMMAND CAB II

ALL-HYDRAULIC BRAKING

NO AIR SYSTEM

COOLING CENTER:
- ***SWING-OUT GRILLE***
- ***AIR TO OIL***
- ***TRANSMISSION COOLER***

HIGH HARDNESS, HIGH
STRENGTH STEEL BODY

AUTOMATIC SHIFT
CONTROL

NEOCON SUSPENSION

SEPARATE HYDRAULIC
RESERVOIRS

EUCLID

ENGINE

Make	**Cummins**			
Model	KT38-C			
Type	4 Cycle			
Aspiration	Turbocharged			
Rated Output (SAE @ 2100 rpm)	kW	**bhp**	690	**925**
Flywheel Output (SAE @ 2100 rpm)	kW	**bhp**	650	**872**
No. Cylinders	12			
Bore & Stroke	mm	159 x 159		
	in	**6 1/4 x 6 1/4**		
Displacement	liters	**in³**	37,7	**2,300**
Max. Torque @1300 rpm	N•m	**lb ft**	4 095	**3,020**
Starting	Electric			

TRANSMISSION

Allison DP-8963, Planetary type, full automatic shift. Integral torque converter with automatic lock-up to lock-up shifting in all ranges. Remote mounted, 6 forward speeds, 1 reverse. Allison Transmission Electronic Control provides park brake interlock and hoist interlock as well as built in diagnostics.

Maximum Speeds @ Governed Engine Speed with standard 24.00x49 tires

		Standard		Optional	
	Gear	**3.73 Differential**		**3.15 Differential**	
Range	**Ratio**	km/h	**mph**	km/h	**mph**
1	4.24	9,48	**5.89**	11,22	**6.97**
2	2.32	17,31	**10.76**	20,50	**12.75**
3	1.69	23,77	**14.78**	28,16	**17.50**
4	1.31	30,67	**19.07**	36,32	**22.57**
5	1.00	40,18	**24.97**	47,58	**29.57**
6	0.73	55,04	**34.20**	65,18	**40.51**
R	5.75	6,99	**4.34**	8,27	**5.15**

DRIVE AXLE

Full floating axle shafts, double reduction provided by Euclid Model 2650 differential and single reduction planetary with balanced life gears in each wheel. Parallel link mounting with "A"-frame top member which reduces "roll-steer" effect.

Ratios	**Standard**	**Optional**
Differential	3.73	3.15
Planetary	6.63	6.63
Total Reduction	24.73	20.88
Maximum Speeds		
with 24.00-49 Tires	km/h 55,0	km/h 65,2
	mph 34.2	**mph 40.5**
with 27.00-49 Tires	km/h 59,9	km/h 71,0
	mph 37.2	**mph 44.1**

TIRES

	Rim Width	
Standard - Front and Rear	mm	**in**
Goodyear 24.00-49(48)E-3	432	**17**
Optional		
Goodyear 27.00-49(42)E-4	495	**19.5**

Plus *optional Goodyear* tire types, treads and ply ratings.

ELECTRICAL SYSTEM

Twenty-four volt lighting and accessories system. Seventy-five amp alternator with integral transistorized voltage regulator. Four 12 volt heavy-duty (8D) batteries connected in series/parallel.

LOAD CAPACITY

	m³	**yd³**
Struck (SAE)	35,6	**46.6**
Heap 3:1	46,0	**60.2**
Heap 2:1 (SAE)	51,3	**67.1**
Payload	Tonne	**Ton**
From	77,1	**85.0**
Maximum	83,5	**92.1**

Based on material density, Euclid will size an optional larger or smaller body to assure rated payload. Consult Euclid market support.

WEIGHTS

	kg	**lb**
Chassis with Hoists	49 964	**110,150**
Body	11 726	**25,850**
Net Machine Weight	61 690	**136,000**
Maximum GMW with Selected Tires		
24.00-49(48)E-3		
Maximum Gross Machine Weight	143 020	**315,300**
*Net Machine Weight	61 690	**136,000**
Maximum Payload	81 330	**179,300**
24.00 R49** RL-3		
Maximum Gross Machine Weight	137 440	**303,000**
*Net Machine Weight	62 324	**137,400**
Maximum Payload	75 116	**165,600**
27.00-49(42)E-4		
Maximum Gross Machine Weight	147 420	**325,000**
*Net Machine Weight	63 890	**140,850**
Maximum Payload	83 530	**184,150**

Machine weight based on 50% fuel.
Maximum gross machine weight not to exceed 147 420 kg **325,000 lbs** including options, fuel and payload.

Options/*Approximate Changes in Net Machine Weight

Body Liners, 400 BHN Steel, Complete (Light Duty)	4 100	**9,020**
Body Liners, 400 BHN Steel, Complete (Heavy Duty)	5 900	**13,100**

Weight Distribution	**Front**	**Rear**
Empty	49%	51%
Loaded	33%	67%

STEERING SYSTEM

Closed-center full time hydrostatic power steering system using two double-acting cylinders, piston type pump and brake/steering system reservoir. Accumulator provides supplementary steering
in accordance with SAE J1511, ISO 5010.

Steering Angle			38°	
Turning Diameter (SAE)	m	**ft in**	22,65	**74'4"**
Steering Pump Output (@ 2100 rpm)	l/m	**gpm**	91	**24**
System Operating Pressure	kPa	**psi**	17 238	**2,500**

HYDRAULIC SYSTEM

Two (2) Euclid two-stage cylinders, double-acting in second stage, internal dampened, inverted and outboard mounted. Separate Hoist/Brake Cooling reservoir and independent tandem gear pump. Control valve mounted on reservoir cable operated.

Body Raise Time	s		13	
Body Float Down Time	s		17	
Brake Cooling Pump Output	l/m	**gpm**	455	**120**
Hoist Pump Output	l/m	**gpm**	455	**120**
System Relief Pressure	kPa	**psi**	17 238	**2,500**

BRAKE SYSTEM

Brake systems comply with SAE J1473 and ISO 3450.

Service
All-hydraulic actuated front disc brakes with two calipers per front disc. Calipers are internally ported, each containing three pairs of opposing pistons. Rear brakes are oil-cooled wet discs.

Front Axle - Dry Disc

Disc Diameter Each (2 discs/axle)	cm	**in**	101.6	**40**
Brake Surface Area Per Axle	cm^2	**in^2**	14 194	**2,200**
Lining Area Per Axle	cm^2	**in^2**	4 129	**640**
Brake Pressure (Max.)	kPa	**psi**	13 790	**2,000**

Rear Axle - Oil-Cooled Wet Discs

Brake Surface Area Per Axle	cm^2	**in^2**	79 243	**12,282**
Brake Pressure (Max.)	kPa	**psi**	10 515	**1,525**

Secondary
Two independent circuits within the service brake system provide back-up stopping capability. System is manually or automatically applied to stop machine within prescribed braking distance.

Parking
Drum, two shoe internal expanding type mounted behind transmission. Automatically applied if hydraulic pressure is lost. Manually controlled from shift console.

Size	mm	**in**	438 x 102	**17 1/4 x 4**
Lining Area	cm^2	**in^2**	1 226	**190**

Retarder
Foot-operated valve controls all-hydraulic actuation of oil-cooled wet disc brakes on rear axle. System provides constant speed control on downhill hauls.

Capacity (Continuous)	kW	**bhp**	950	**1,275**
Capacity (Intermittent)	kW	**bhp**	1805	**2,420**

The Euclid R85B is equipped with an all-hydraulic actuated braking system providing precise braking control and quick system response. The brake control valve is actuated directly at the brake pedal. The controller has a unique variable front to rear brake proportioning that maximizes the stopping performance under slippery road conditions without having to deactivate front brakes.

WET DISC BRAKE

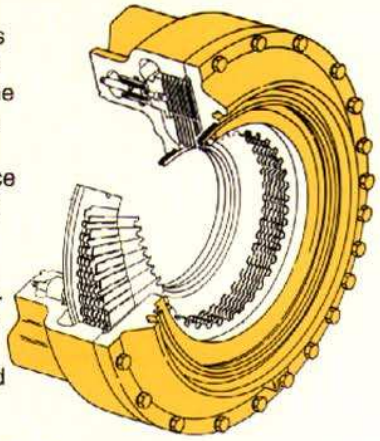

The Euclid wet disc brake is engineered for long service life even in the most extreme environments. The wet disc brakes are located on the rear axle and provide service braking, secondary braking and retarding. The brakes are of a multi-plate design and continuously oil-cooled. The sealed design protects against environmental contamination for prolonged service life. The wet disc brake is designed with automatic retraction and self-adjusting features to prevent drag and compensate for wear. Separate pedals activate the service braking and retarding functions.

CAB ROPS/FOPS

Structurally Sound. Command Cab II, double-wall construction of 11 gauge inner and outer steel panels, lends itself to a more structurally sound cab. Foam rubber lining material along with foam rubber-backed carpeting and multiple layered floor mat act to absorb sound and control interior temperature. A three-point rubber iso-mount arrangement to the deck surface minimizes vibration to the operator's compartment. The R85B is designed and originally manufactured to meet OSHA sound limitations at the operator's station with windows and vents closed under normal conditions. Featuring an integral ROPS (Rollover Protective Structure) manufactured by Euclid in accordance with SAE J1040, ISO 3471, FOPS SAE J231 and ISO 3449. Operator and trainer seat belt in accordance with SAE J386 and ISO 6683.

Ease of Operation and Systems Monitoring. A wrap-around style dashboard positions the controls within easy reach and visual contact. A full complement of easy-to-read, color-banded gauges with international symbols and centrally positioned tachometer, speedometer and bank of warning lights provide the operator information required to safely pilot the machine.

Excellent Serviceability. A removable front closure allows easy access to electrical components, service brake valve, retarder valve, and washer bottle. All electrical junction points are located in the front compartment. The upper dash utilizes four (4) removable panels to house gauges and customer options, with each individually accessible.

Designed for Operator Comfort. Command Cab II standard equipment includes a six-way adjustable mechanical seat, tilt steering wheel, filtered ventilation and a fully upholstered trainers seat that folds down to reveal a tray for lunch boxes and other gear.

STANDARD EQUIPMENT

General

All Hydraulic Braking
Automatic Transmission Shifting
Body Down Indicator, Mechanical
Body Prop Cable
Canopy Spill Guard
Continuous Heated Body
Cooling System Sight Gauge
Cooling System Surge Tank
Cushioned Hoist Cylinders
Electric Horns
Electric Start
Fan Guard
Fixed Steering Stops
Hoist Interlock
Hoist Tank Sight Gauges
Mirrors Right and Left
Mud Flaps
Neocon Suspension
Operator Arm Guard
Park Brake Interlock
Radiator Grill Guard
Reverse Alarm
Rock Ejector Bars
Steering Accumulator
Steering Tank Sight Gauge
Swing-out Grille
Tow Hooks, Front
Transmission Sight Gauge
Wet Disc Brake Wear Indicators

Cab

Acoustical Lining
Air Filtration/Replaceable Element
Ash Tray
Cab Interior Light
Cigar Lighter
Door Locks
Emergency Engine Shut Down Switch
Full Trainer Seat
Heater and Defroster 7.6 kW 26,000 btu
Integral ROPS/FOPS Cab
Load Counter, Mechanical
Modular Instrumentation
Mechanical, 6 Position Seat
Operator Seat Belt
Quick Connect Test Ports
Rubber Floor Mat
Safety Glass
Sun Visor
Tilt Steering Wheel
Tinted Glass All Windows
Trainer Seat Belt
Windshield Washer
Windshield Wiper

Gauges and Indicators

Air Cleaner Restriction Gauge
Alarm System, Multi-Function
- Indicator Lights
  - Hydraulic Filter Restriction
  - Parking/Hand Brake Applied
  - Retard Temperature
  - Steering Filter Restriction
  - Transmission Malfunction
- Indicator Light & Alarm:
  - Brake System Malfunction
    - Steering System
    - Engine Oil Pressure

Clutch Pressure Gauge
Converter Oil Temperature Gauge
Coolant Level Sight Gauge
Coolant Temperature Gauge
Engine Oil Pressure Gauge
Gauge Lights
High Beam Indicator Light
Retard Temperature Gauge
Speedometer
Steering & Hoist Tank Level Sight Gauge
Steering/Brake Pressure Gauge
Tachometer/Hourmeter
Transmission Oil Level Sight Gauge
Voltmeter

Machine Lights

Back-Up Light (1)
Clearance Lights (2)
Dual Combination Stop and Taillights (2)
Headlights, (4)
Turn Signals and Four-Way Flashers

OPTIONAL EQUIPMENT

Active Traction Control (ATC)
Air Conditioning
Air Suspension Seat
Alarm System, Multi-Function (Low Oil Pressure, High Coolant Temperature, Low Coolant, High Conv. Temperature)
Body Liners (400 BHN) Plates, STD and HD
Body Sideboard Extensions
Canopy Spill Guard Extension
Cold Starting Aid
Decals, French, German & Spanish
Differential, 3.15:1 ratio
Engine Heater (Oil & Coolant)
Extra Reverse Alarm
Fast Fueling
Fast Coupling Service Center
Fuel Gauge
Fuel Tank Sight Gauge
Field Replaceable Radiator Tubes
German Market Equipment (TGB)
Guard Rails
Hoodsides (Metal)
Hubodometer
Kim Hotstart Pre-Heaters
Load Weighing
Lube System, Automatic
Lube System, Centralized
Main Battery Switch
Muffler
Radio & Tapeplayer
Tires (Size, Type & Rating)
Tire Guards (Std. with 27.00-49 Tires)
Transmission Guard
Unit Sound Suppression

Standard and optional equipment may vary from country to country. Special options provided on request. Consult Euclid market support.

Note: Dimensions shown are for empty machine with 24.00-49E-3 tires.

*With 27.00-49E-4 tires add ,08m **3"**
With 27.00-49E-4 tires add ,16m **6"
***With 27.00-49E-4 tires subtract ,16m **6"**
****With 27.00-49E-4 tires subtract ,16m **6"**

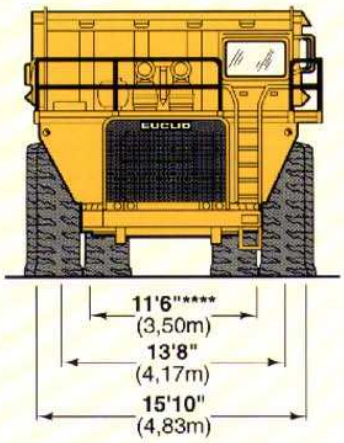

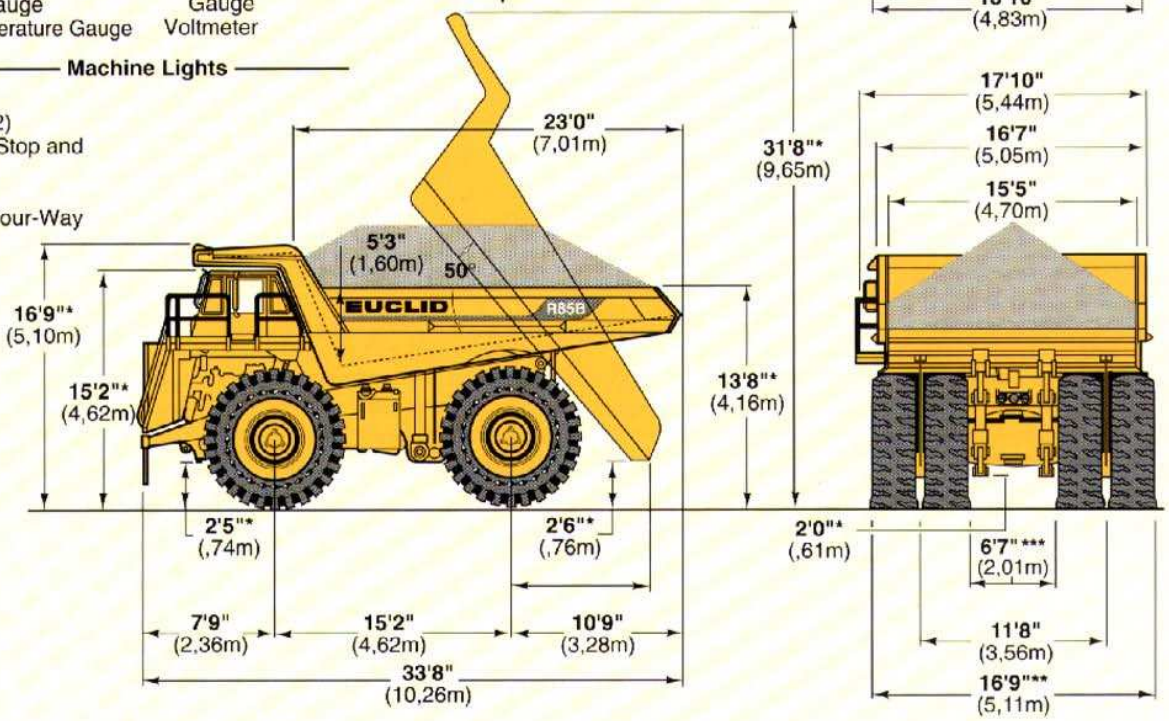

SUSPENSION

Front and Rear Suspension
Independent trailing arm for each front wheel. Neocon struts containing energy-absorbing gas and compressible Neocon-x fluid mounted between trailing arm and frame. The cast rear axle housing has a parallel link mounting with an A-Frame top member. Provides a reduced "roll-steer" effect which results in a more stabilized ride and contributes to lower overall frame stress levels. Rear mounted Neocon struts suspend drive axle from frame. Neocon struts provide variable damping and rebound feature.

The Euclid frame and suspension are designed to work in unison to provide maximum structural integrity and operator comfort.
The formed rectangular frame rail construction provides superior resistance to bending and torsional loads while eliminating unnecessary weight. Euclid achieves long frame fatigue life through proven design and manufacturing practices. Smooth frame transitions minimize stress concentrations and steel castings effectively distribute input loads. Frame life is further enhanced by utilizing fatigue resistant weld joints and locating welds in low stress areas. The unique trailing arm front suspension absorbs haul road input, minimizing suspension-induced frame twisting while providing independent tire action. Ride struts are mounted with spherical bushings, eliminating extreme sidewall forces by ensuring a purely axial input to the ride strut. The wide track stance of the trailing arm design and long wheel base assure a more stable, comfortable ride. The suspension struts employ gas and Neocon-x fluid as the energy-absorbing media. This suspension continues to absorb energy when extreme dynamic loads are generated which significantly contributes to improved isolation of the operator and machine components.

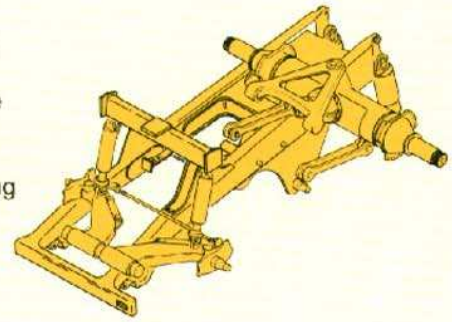

SERVICE CAPACITIES

	liters	**gallons**
Crankcase (incl. filters)	140,0	**37.0**
Transmission (incl. filters)	98,4	**26.0**
Cooling System	268,7	**71.0**
Fuel Tank	1003,0	**265.0**
Hydraulic		
Hoist Tank	280,0	**74.0**
Steering Tank	114,0	**30.0**
Differential	147,6	**39.0**
Planetaries	136,3	**36.0**

BODY

Flat chute type, sloped floor, continuously exhaust heated. High tensile strength 1310 N/mm² **190,000 psi** alloy steel 400 BHN used in thickness of:

	mm	**in**
Floor	16	**5/8**
Front	8	**5/16**
Sides	8	**5/16**
Canopy	5	**3/16**
Corner	11	**7/16**
Optional Body Liners (Light Duty)		
Floor, Corners & Top Rails	10	**3/8**
Sides, Front, End protection & Canopy	6	**1/4**
Optional Body Liners (Heavy Duty)		
Floor & Corners	16	**5/8**
Top Rails	10	**3/8**
Sides, Front & End Protection	8	**5/16**
Canopy	6	**1/4**

The horizontal stiffener design of the Euclid body minimizes stress concentrations in any one area. Load shocks are dissipated over the entire body length. The closely-spaced floor stiffeners provide additional protection by minimizing distances between unsupported areas.

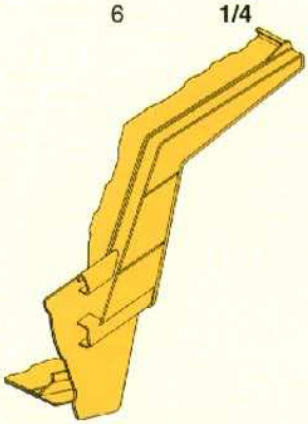

FRAME

Formed rectangular rails with section height tapered from rear to front, bridged by four cross members, front bumper and front suspension tube. Cross member to frame junctions use large radii to minimize stress. Frame utilizes 310 N/mm² **45,000 psi** yield strength steel.

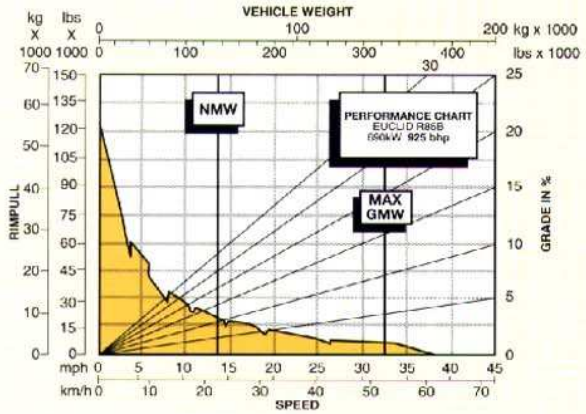

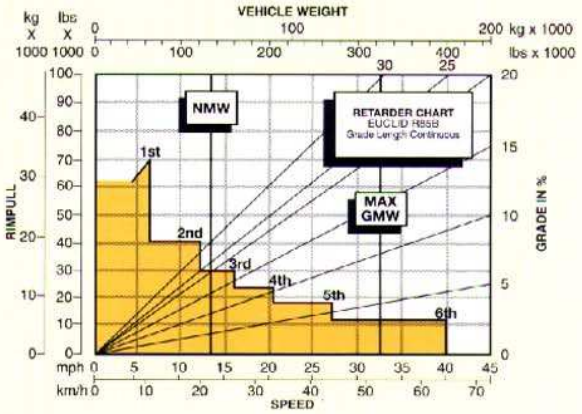

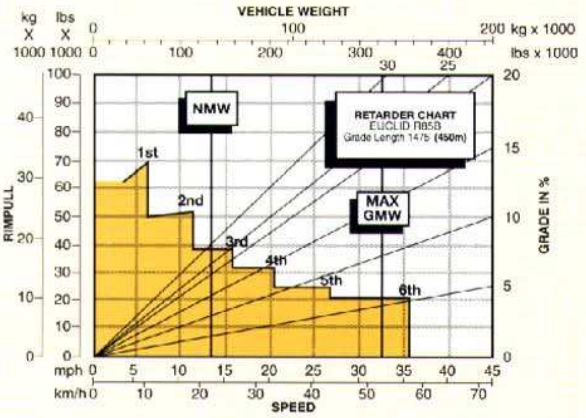

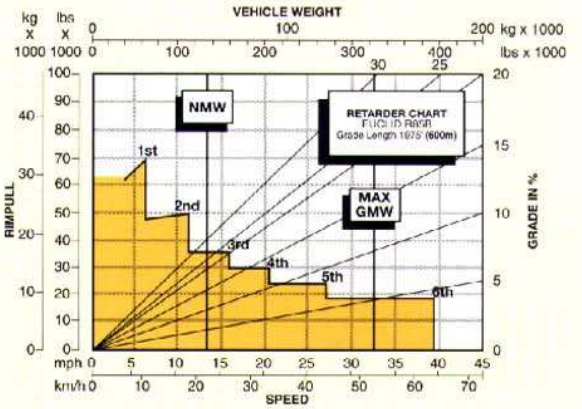

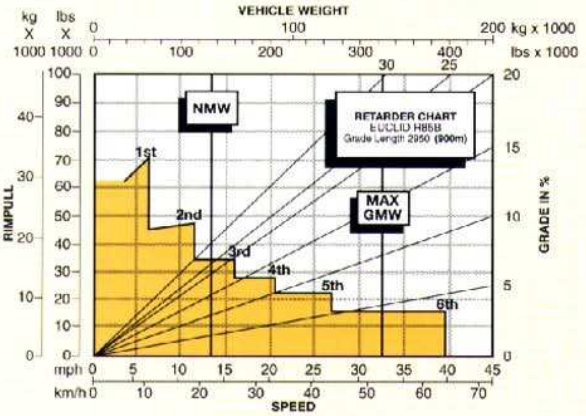

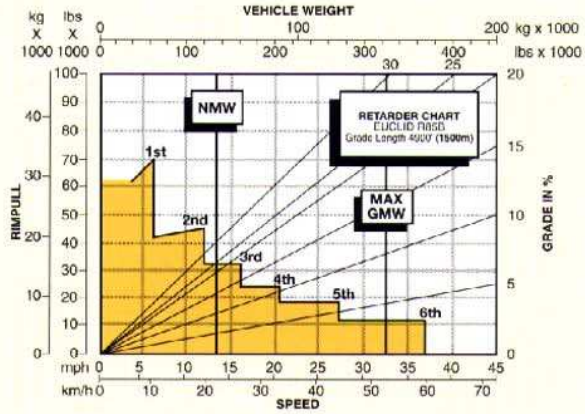

INSTRUCTIONS:

Diagonal lines represent total resistance (Grade % plus rolling resistance %). Charts based on 0% rolling resistance, standard tires and gearing unless otherwise stated.

1. Find the total resistance on diagonal lines on right-hand border of performance or retarder chart.
2. Follow the diagonal line downward and intersect the NMW or GMW weight line.
3. From intersection, read horizontally right or left to intersect the performance or retarder curve.
4. Read down for machine speed.

NOTE: Photos and illustrations throughout may show optional equipment.

Under our policy of continuous product improvement, we reserve the right to change specifications and design without prior notice. The Illustrations do not necessarily show the standard version of the machine.

EUCLID-HITACHI
Heavy Equipment, Inc.
22221 St. Clair Ave.
Cleveland, OH 44117-2522

FORM NO. RH-483 R1
DATE 3/94
Printed in U.S.A.